Crimp-Einstellung / *Selector settings for crimping*	Kabel-Ø / *useable cable-Ø*	Litze / *Conductor*	Empfohlener Kabeltyp / *Recommended cable type*
8 für / *for* AWG 12 7 für / *for* AWG 14	Ø9 - 16 mm	AWG 12 - 14 (3x) Kupferlitze / *Stranded copperwire*	3 Conductor AWG 12, Type SJOOW 3 Conductor AWG 14, Type SOOW / SJOOW
Verwendung von grüner oder grün/gelber Litze im Steckverbinder an Position *Use green with or without one or more yellow stripes wire at ground conductor position in connector marked with*			

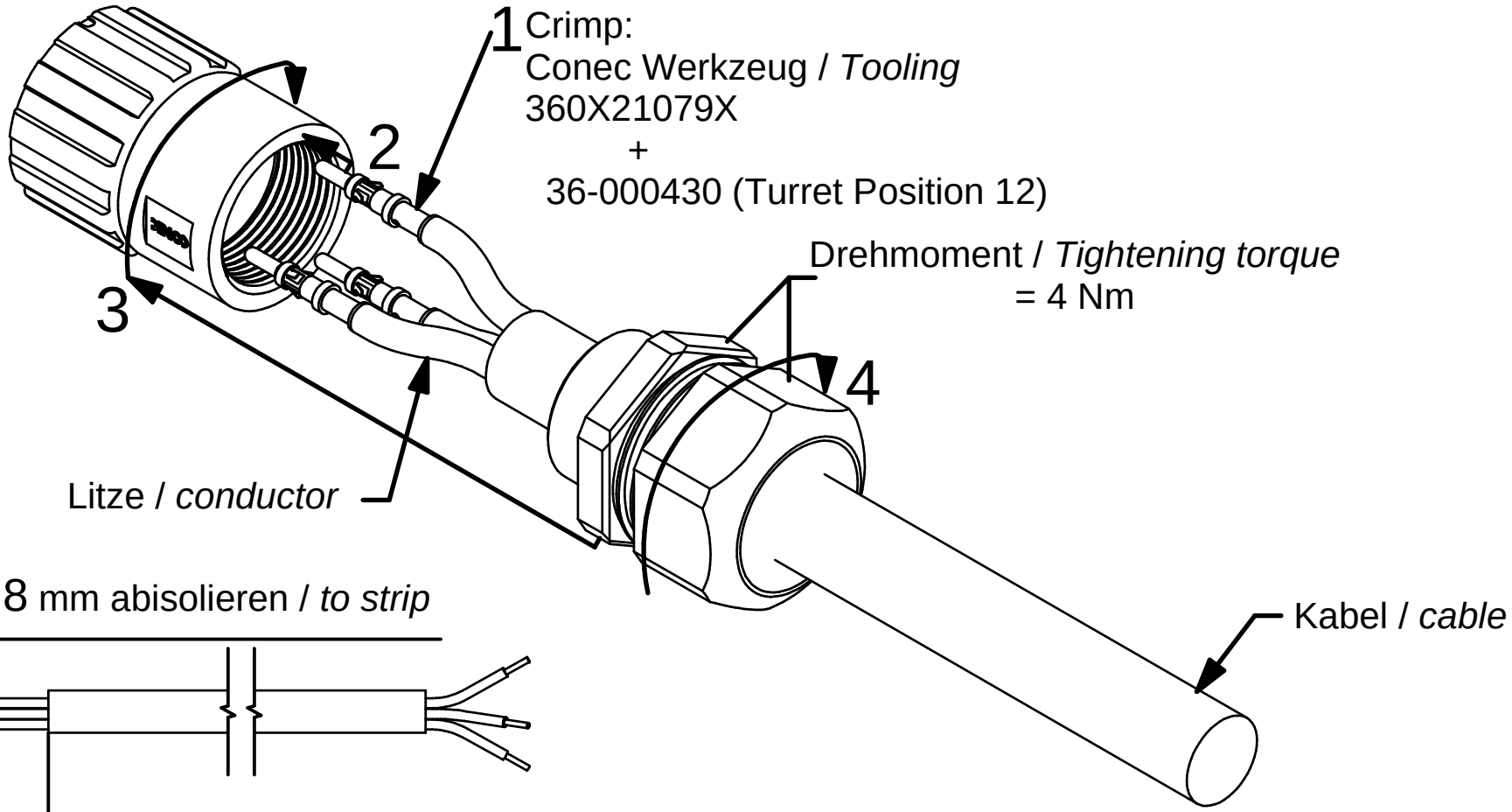

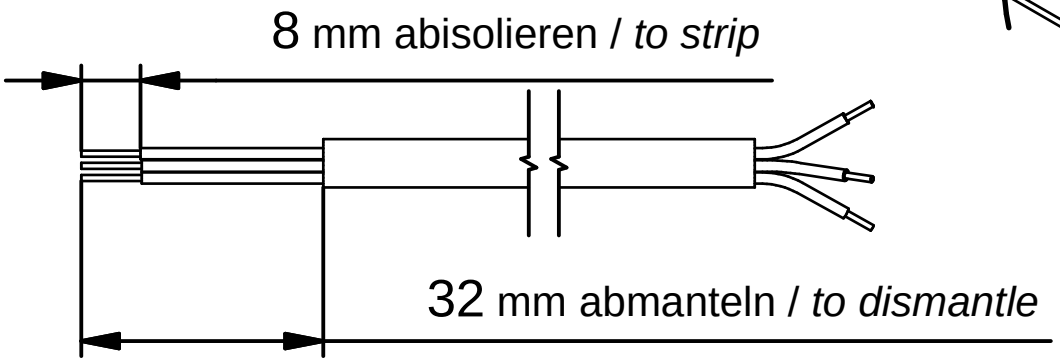

AI-5060-POWER