**Product data sheet**

# Subminiature connectors

| | |
|---|---|
| Product description | **Bayonet male panel mount connector, Contacts: 5, shielding is not possible, solder, IP40** |
| Area | **Bayonet series 710** |
| Order number | **09 0997 00 05** |

## Illustration

## Scale drawing

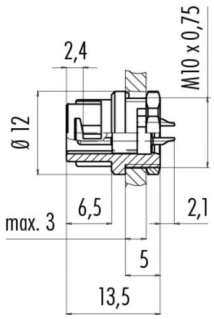


## Contact arrangement

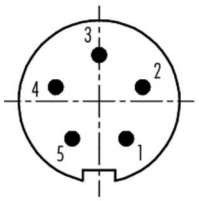


| | X | Y |
|---|---|---|
| 1 | 1,00 | -1,37 |
| 2 | 1,61 | 0,52 |
| 3 | 0,00 | 1,70 |
| 4 | -1,61 | 0,52 |
| 5 | -1,00 | -1,37 |

**You can find the assembly instructions on the next page.**

# Technical data

## General values

| | |
|---|---|
| Connector design | male panel mount connector |
| Connector locking system | Bayonet |
| Termination | solder |
| Wire gauge (mm) | 0.25 $mm^2$ |
| Wire gauge (AWG) | 24 |
| Upper limit temperature | 85 °C |
| Lower limit temperature | – 40 °C |
| Customs tariff number | 85369010 |
| Packaging Unit | 50 |

## Electrical values

| | |
|---|---|
| Rated current (40 °C) | 3 A |
| Rated voltage | 125 V |
| Rated impulse voltage | 1500 V |
| Pollution degree | 1 |
| Overvoltage category | II |
| Insulating material group | III |
| Insulation resistance | ≥ $10^{10}$ Ω |
| EMC compliance | shielding is not possible |
| Degree of protection | IP40 |
| Mechanical operation | > 500 Mating cycles |

## Material

| | |
|---|---|
| Contact material | CuZn (brass) |
| Contact plating | Au (gold) |
| Contact body material | PA (UL94 V-0) |
| Housing material | PA |
| REACH SVHC | CAS 7439-92-1 (Blei (Pb)) |

| | |
|---|---|
| Product description | **Bayonet male panel mount connector, Contacts: 5, shielding is not possible, solder, IP40** |
| Area | **Bayonet series 710** |
| Order number | **09 0997 00 05** |

## Assembly instructions / Panel cut-out

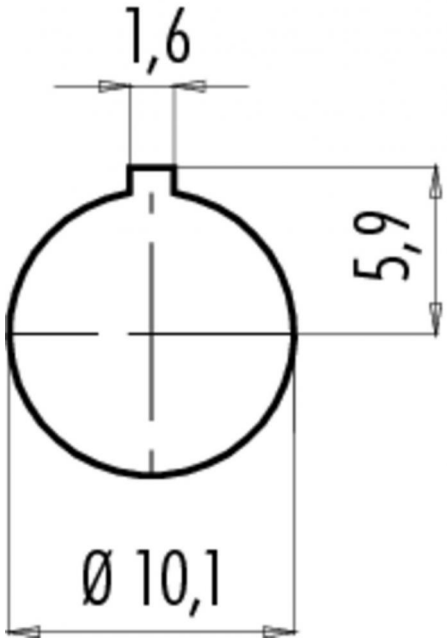

| | |
|---|---|
| Product description | **Bayonet male panel mount connector, Contacts: 5, shielding is not possible, solder, IP40** |
| Area | **Bayonet series 710** |
| Order number | **09 0997 00 05** |

## Security notices

The connector must not be connected or separated under load. Non-observance and incorrect use can result in personal injury.
The connectors are designed for use in plant, control system and electrical equipment. The end user is responsible for checking whether the connectors are suitable for use in other applications.