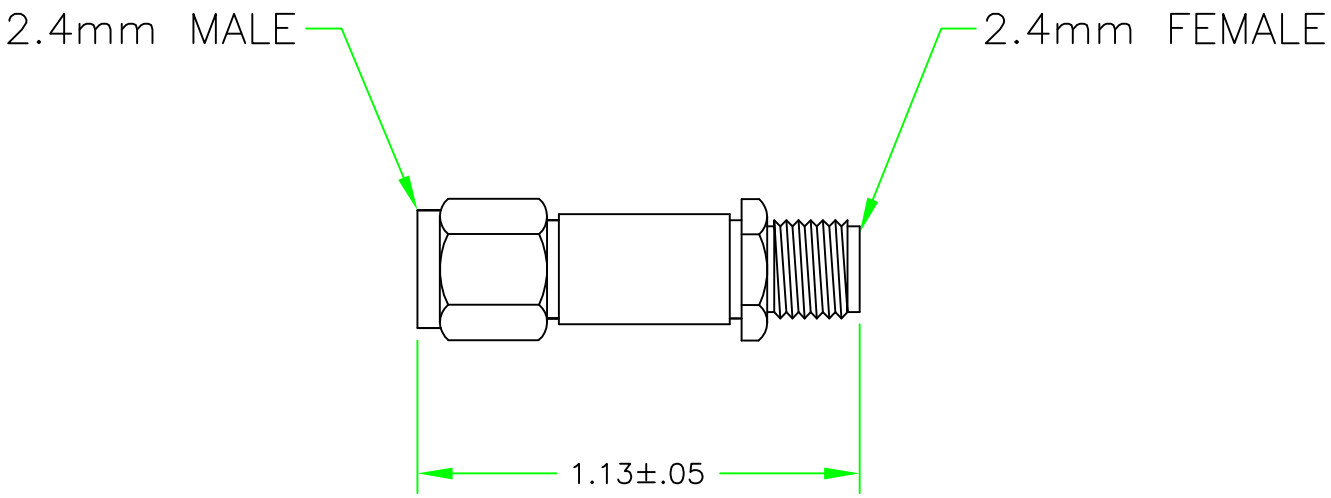

REV	ECN	DATE	BY	APPR
–	ISSUED	7–9–15	JZ	TEZ

JFW INDUSTRIES, INC.

www.jfwindustries.com PH: 317–887–1340

MATERIAL

FINISH

MODEL

SCALE 2X

DESCRIPTION

DC BLOCK

PROPRIETARY INFORMATION

ALL SURFACES ARE TO BE FREE OF BURRS, PITS, & SCRATCHES

TOLERANCES
.XX±.010 .XXX±.005 XX°±.5°

DWG # 092–8358