www.cometsystem.com

User‘s Guide

U0110M
U0141M
U0843M
U3120M
U3121M
U3631M
U4440M
U6841M
U7844M
U8410M

GSM modem dataloggers

© Copyright: COMET SYSTEM, s.r.o.

This User's Guide may not be copied, and its contents may not be changed in any way without explicit consent of COMET SYSTEM, s.r.o..
All rights reserved.

The COMET SYSTEM, s.r.o. company is continuously developing and improving its product. COMET SYSTEM, s.r.o. reserves the right to carry out technical changes in equipment or product without any previous notice.

Contact address of this device's producer:

COMET SYSTEM, s.r.o.
Bezrucova 2901
756 61 Roznov pod Radhostem
Czech Republic
www.cometsystem.com

List of contents

INTRODUCTION 4
SAFETY MEASURES AND UNAUTHORIZED MANIPULATIONS 6
GUIDE TO INSTALLATION AND USAGE OF THE DEVICE 7
- Inserting the SIM card into the device 7
- Installing the datalogger, placing the probes 8
- Device set-up 10
- Running the device 10
- Device disposal procedure 11

OPERATING THE DATALOGGER FROM THE KEYPAD 12
- Displaying the device data 12
- Menu Options 16

MODELS PRODUCED 17
COMET VISION PROGRAM 25
SETTING UP THE DEVICE 26
- How to set up the device by means of a program 26
- The device setup from a program (Configuration) 26

APPLICATION NOTES 36
RECOMMENDATIONS FOR OPERATION AND MAINTENANCE 39
TECHNICAL PARAMETERS 42
- Power supply 42
- USB communication interface 43
- Measurement, data storage and real time circuitry 43
- Radio section 44
- Parameters of datalogger inputs 45
- Operating and storage conditions 53
- Mechanical properties 54
- Declaration of conformity 54
- Dimensions 55

ANNEXES 58
- Annex 1: Selected error messages of the device 58
- Annex 2: Connection of the Pt1000/E serie probe connector 59
- Annex 3: Accuracy of the dew-point temperature measurement 60
- Annex 4: Connecting block 60
- Annex 5: SMS message format 61
- Annex 6: Firmware updates 64

Introduction

This datalogger is designed for autonomous measurements and recording of physical and electrical data, with the data recording interval from 1 s to 24 h. The inputs and ranges of quantities to be measured are determined by the model type the user has bought. The user cannot modify them. This portable device can be mounted in a fixed-position. To set up datalogger, a PC with a USB interface is needed.

This device allows:

- to measure and process input data coming from internal or external sensors, binary inputs, counters or current inputs.
- to detect and log minimum and maximum values (existing since their last manual resetting) of each quantity,
- to display the measured values on an LCD display. Some features can be controlled by two push buttons situated next to the display (device switching off and on, deactivation of alarm signalling, Min/Max value resetting),
- to store an autonomous chronological record of measured values in internal non-volatile memory. The values to be collected can be measured at the instant of recording or as average or min/max values detected during the recording interval. Recording can be performed continuously or at the alarm time only. The recording mode can be also set optionally as non-cyclic to stop at the memory filling up, or as cyclic. In this mode the originally recorded values will be overwritten by fresh ones after the memory unit getting filled up.
- to set up two alarm signalling limits for each quantity to be measured. The alarm signalling can be realised visually, optionally by a symbol appearing on the display or by a short blink of an LED, or acoustically. In addition, all UxxxxM series dataloggers contain a GSM modem enabling to send alarm SMS messages to up to four selected receivers and can send values over a GPRS data connection using JSON messages when changing the alarm status.
- to send, at a configurable interval, informative SMS messages containing device identification, currently measured values and alarm states to up to four selected receivers. These messages may be of two kinds: user readable (suitable to be displayed on a mobile phone), or machine readable (suitable for automated data processing in a database or a cloud).
- In configurable interval to send measured values over a GPRS data connection using JSON messages
- to be supplied in autonomous manner from an internal Li-ion accumulator. This can be charged by a common USB charger. An internal GSM modem is connected to the supply unit only when a sending request has been sent out, otherwise it is switched off to save energy.
- to communicate with a computer by means of a USB interface (all device settings, recorded data downloading, and online monitoring). To communicate, the datalogger utilises the HID USB standard, which does not require additional controllers to be built into the PC.

General view of a UxxxxM series datalogger (U0141M model):

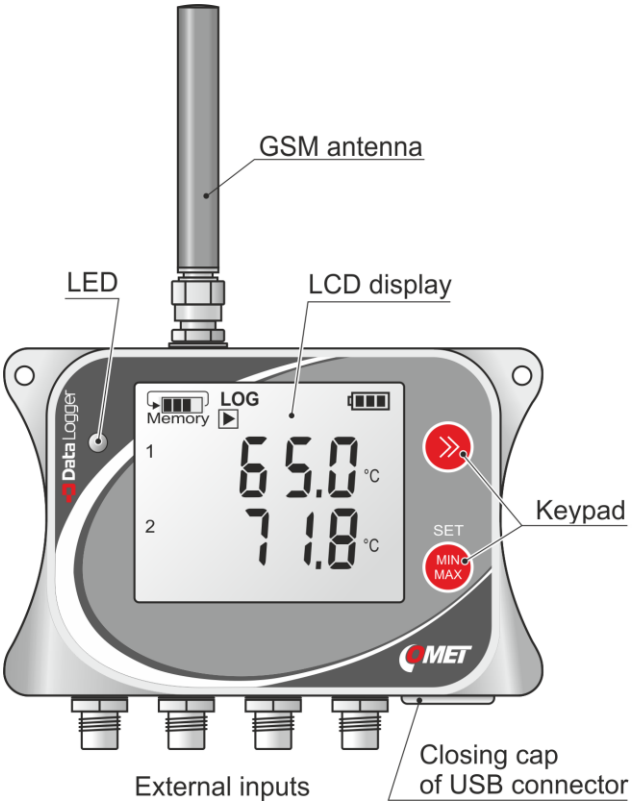

Safety measures and unauthorized manipulations

Read the following safety directions carefully before putting the device into operation. Follow these instructions when using the device!

- **Legislative conditions.** This datalogger contains a radio transmitter working in GSM frequency bands and using power values that are shown in its Technical parameters. These bands and power values are used in the countries of the European Union. Before the first setting the device in operation make sure that you are allowed to operate the device if you reside in a locality outside the EU.
- **Electromagnetic interference.** Do not use the device in an area where the usage of mobile phones is limited, e. g. near sensitive medical apparatus, on board a plane or in localities where explosive materials are used.
- **Operating and storage conditions.** Observe the recommended operating and storage condition as quoted in the Technical parameters. This datalogger makes use of an internal Li-ion rechargeable battery. Be particular about the device‘s not being exposed to temperatures higher than 60°C. Do not expose the device to direct radiation of heat sources and sun.
- **Fire and explosion hazard.** It is not allowed to use this datalogger within hazardous areas, especially those endangered by a potential explosion of combustible gases, vapours or dust.
- **Device cover.** Do not operate the datalogger without the cover. After inserting the SIM card check the integrity of the sealing. Screw the device together by using the original screws. Proceed always exactly according to instructions that are given later in this User’s guide.
- **Aggressive surroundings.** Do not expose this device to any kind of aggressive surroundings, to chemicals or mechanical shocks. Use soft tissue for cleaning. Do not apply solvents or similar aggressive agents.
- **Battery damage.** Should the battery casing get damaged or should the whole device get destroyed, carry it outside the fire, high temperature or water affected area to a safe fire-protected place. Protect yourself and the environment against escaping gases and against being soiled with the battery electrolyte.
- **Failures and servicing.** Do not try to repair the device yourself. Any repairs including battery exchange may be carried out by suitably instructed service personnel only. If the device shows signs of unusual behaviour, screw off the rear cover to disconnect the battery connector. Avoid the removed battery contacting any metallic parts. Contact the distributor you have bought the device from.
- **Accumulator charging.** Use the charger that has been recommended to charge the accumulator. During the charging procedure the device has to be located in an indoor room with a relative humidity (RH) up to 85 %. The charging will proceed at an indoor temperature ranging between 0°C and +40°C.
- **Protection against water and dust.** The device will be protected against water and dust only when all connectors are duly tightened, and the USB connector is provided with a closing cap. The input connectors that are not used have also to be provided with closing caps.
- **Serviceability.** This device makes use of the wireless communication and the GSM network. For this reason, the connection (SMS, GPRS, etc.) cannot be guaranteed always and under any circumstances. Do not rely merely on wireless equipment if crucial communications must be realized (rescue systems, safety systems). Bear in mind that redundancy is indispensable for systems featuring high functional reliability. See e.g. IEC 61508 for more information.
- **Recommended accessories.** Use only accessories that are recommended by the producer.

Guide to installation and usage of the device

Inserting the SIM card into the device

- Prepare suitable SIM card - depending on the intended use, prepare a SIM card that will meet the expected amount of sent SMS messages and transmitted data. Transmited data can be send through GPRS data connection. Approximate data consumption is 1.5kB for each sent data message when sending via HTTP (if you use HTTPS, it will increase to 8.5kB per message)

- Get a suitable SIM card ready – a *micro*-sized SIM card can be inserted into the device. If a *nano*-sized card is at your disposal, you will have to obtain a reducing adapter to the *micro-sized* SIM. The SIM card must be allowed to send SMS messages. If the SIM card is safeguarded by means of a PIN code, note and save this code to enter it into the device configuration. Select such a tariff that meets your requirements concerning the quantity and safety of the message delivery. *In some tariffs the message delivery may be stopped when a certain number of messages is exceeded or when a given time period has elapsed.* Make sure the device is turned off. Turn it off if necessary.

- Screw off the rear cover of the device – caution, the device is constantly supplied from the internal battery. Proceed with care. Prevent external conductive parts from contacting electronics components when manipulating the device without the back cover installed.

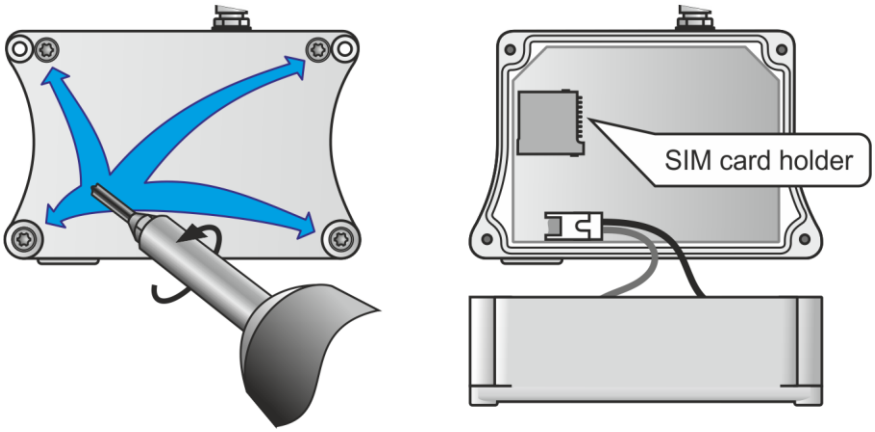

- **Insert the card into the SIM card holder**

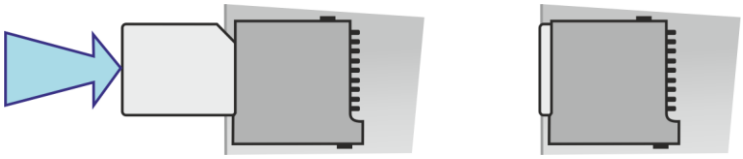

- **Removing the card from the SIM card holder**

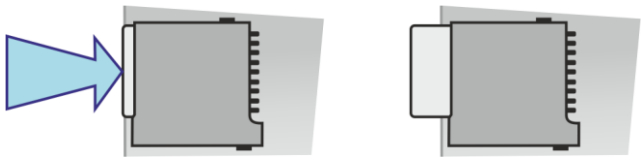

- **Screw up the rear cover of the device** - at first check the seal in the nut for integrity, then screw down the lid with the aid of four self-cutting screws. ATTENTION – tighten screws gradually and with feeling!

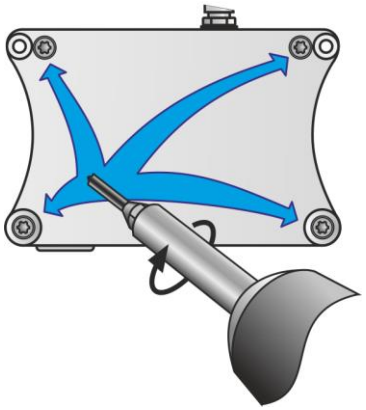

GSM module status (blue LED indication)

LED state	Module Function
Off	The module is not running
64ms On / 800ms Off	The module is not synchronized with network
64ms On / 2000ms Off	The module is synchronized with network
64ms On / 600ms Off	The GPRS data transmission after dialling the PPP connection

Installing the datalogger, placing the probes

- **Choose a suitable location for installing the device** - bear in mind that the environmental conditions should be concordant with the *Operating conditions*. Do not situate the device near sources of electromagnetic interference.
- **Recommended working position** - the aerial is supposed to point upwards:
- **Check the availability and quality of the GMS signal in the aerial location** - use a mobile phone utilizing a SIM card of the same operator as that of the datalogger. Search another installation location if the signal quality is not satisfactory. It is especially in iron concrete constructions, cellars, metal chambers or other shielded rooms that the GMS signal may be insufficient.

- **This device may be operated as a portable one**. In this kind of operation avoid the device falling. Try to maintain the proper working position.
- **You can screw the device on the wall or some other solid base**

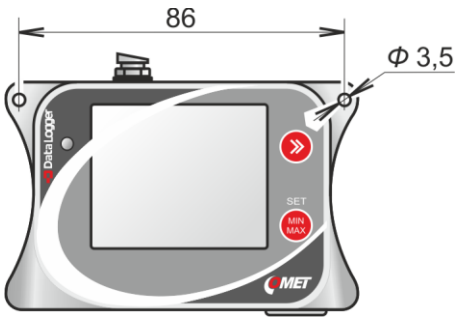

- **You can fix the device on the wall with the aid of a lockable holder LP100** (optional accessory)

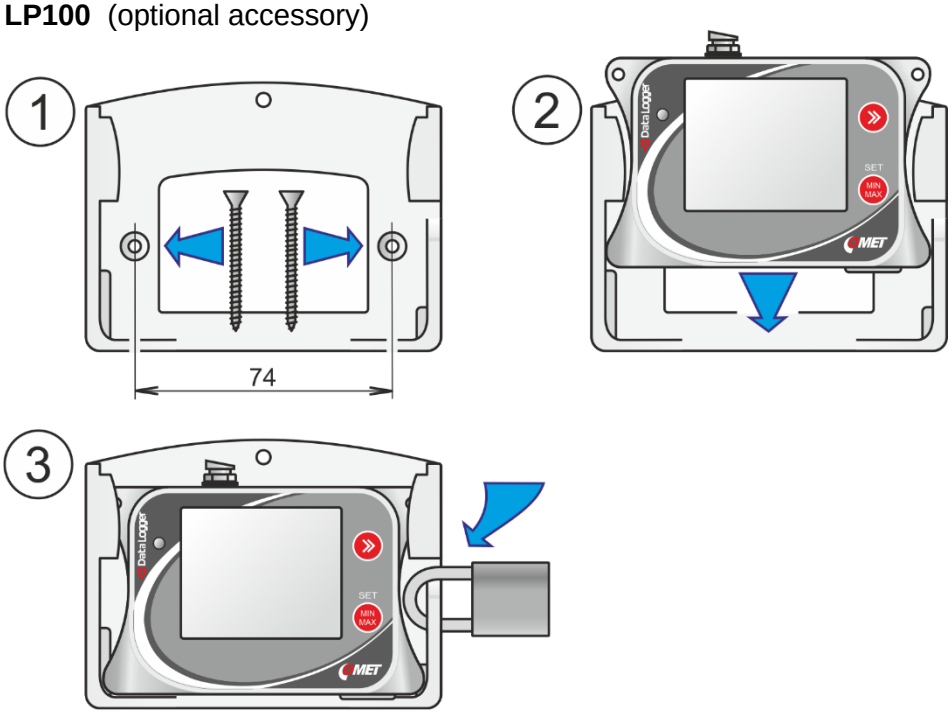

- **Probe installation and cable routing** - observe the installation instructions, realize the recommended operating positions, avoid electric-power distribution systems. See the chapter „*MODELS PRODUCED*“ for more information.
- For the U3120M, U3631M and U4440M device remove any transport transparent foil from the front and side panel (otherwise it would prevent air access to internal sensors)

Device set-up

- **Connect the appropriate probes and signal leads to the device**. For more information refer to the chapter „*MODELS PRODUCED*“.
- **Install the *COMET Vision* software into your computer** - is available for free on the address www.cometsystem.com.
- **Run COMET Vision software**
- **Connect the device to the computer** - on the datalogger side, use a USB cable provided with a USB-C terminal.
- **Setting up the device** - with the aid of the *COMET Vision* program, set up the device identification, the names of the points to be measured, the recording mode, the alarms and there signalling. If a PIN code is set on your SIM card, be sure to set it in the Configuration-Modem-General section before using the logger for the first time, the default setting is No PIN code.
- For more information, refer to the chapter „SETTING-UP THE DEVICE“.

Running the device

- **After the set-up** - Disconnect the device from the computer and close the USB connector with a closing cap. Check that al connectors, including the aerial connector are properly tightened. *The device may be operated with a USB cable that is permanently connected to a computer or to a charger. In this case the ingress protection will be reduced to IP 20.*
- **Operating the device by means of keys** - In the main display mode you can switch over between individual channels and the display mode *Current / minimum / maximum values* by means of the keys. By pressing a certain key combination, you will enter a menu in which you will be able to switch the device on or off, to delete the Min/Max values and to disable the alarm signalling. For more information, refer to the chapter „*OPERATING THE DATALOGGER FROM THE KEYPAD*“.
- **Charging the batteries** - an internal charger will be activated immediately after connecting the USB charger or after connecting the datalogger to the computer. The datalogger contains an intelligent charging circuitry evaluating the battery condition and internal temperature. Charging time depends on the current battery discharge status The battery charging process will be initiated only in the case that the battery voltage is low and the internal temperature ranges between 0°C and 40 °C. Use the recommended charger type only. During the charging period the ingress protection is reduced to IP 20; therefore, do the charging under room (or similar) conditions only. If the battery is very low, the charging process may be terminated with an error message. In such a case contact the datalogger vendor to apply for battery replacement. During the battery charging period the internal temperature of the device may be slightly raised, which can, for a short period of time, adversely

influence the measurement values of the internal sensors. Therefore, the charging speed **with the power on is deliberately slowed down** to avoid excessive measurement influence. If you want to charge the device as soon as possible, turn it off first. When the device is turned off, the fast charging mode is automatically activated. Fully charged battery is indicated on the display of the device usually within 6 hours.

- **Maintenance and regular checks** - for a reliable functioning of the device it is advisable to perform its regular check-ups. For more details refer to „RECOMMENDATIONS FOR OPERATION AND MAINTENANCE“.

Device disposal procedure

Screw-off the rear cover of the datalogger, disconnect the battery connector and take out the battery. The device is disposed of as electronic waste. The battery must be disposed of as hazardous waste. Remember there can be a SIM card inside the device.

Operating the datalogger from the keypad

Displaying the device data

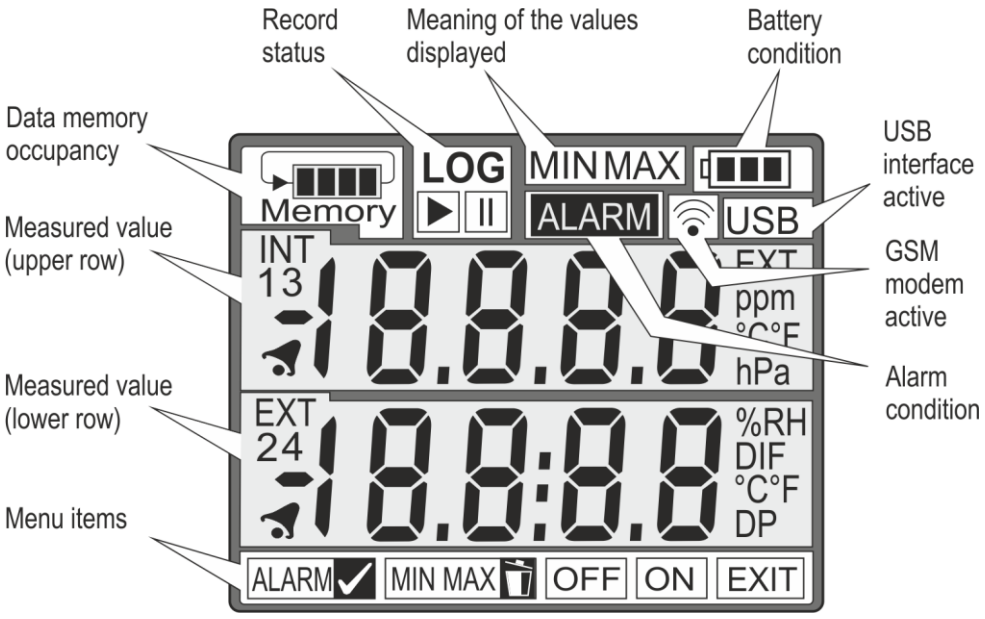

Data memory occupancy - this display section offers information about the current condition of the free space existing in the data memory. The blinking of the *Memory* symbol indicates that the preset memory occupancy limit has been exceeded. This limit can be set up in the device's configuration. Several actions can be assigned to it (optical and acoustic signalling, sending SMS messages).

The memory occupancy is about 75 %, the device is in the ***non-cyclic* recording mode**, i.e. the recording will be stopped as soon as the memory capacity is full.

The memory occupancy about 75 %, the device is in the ***cyclic* recording mode**, i.e. as soon as the memory capacity is full, the oldest data will be overwritten.

The memory occupancy 100 %, the device is in the *cyclic* recording mode. The preset memory occupancy limit has been exceeded (The *Memory* symbol is blinking).

Record status - offers information on whether the recording is ON and whether it is just running.

LOG A continuous recording with a preset interval is ON and running.

The recording is ON in the device and it is running at present. *This kind of display is utilized, when the record activity is dependent on the alarm or the external input condition.*

The recording is ON in the device but it is not running at present. *For instance, the rrecording is ON during an alarm only, and there is no alarm just now. Or, a recording is ON that is controlled by an external input which not active at the moment.*

The LOG symbol is not displayed: The recording is OFF in the device. The recording is not allowed in any channel in the device's configuration.

Meaning of the values displayed - this item specifies the meaning of the measured values displayed in the two main rows. Beside the currently measured values the device will also evaluate the minimum and maximum values from their last resetting by the user. *If the device is OFF and has not been running for some time, then, after it is turning ON, the value of Min / Max is then set to the values before switching OFF.* It can be preset in the device configuration, whether and in what manner these Min/Max values will be displayed by the device. Remember that the Min/Max in question are different from those being recorded.

Neither MIN nor MAX is displayed. You can see values that have been currently measured.

In both display rows you can see the minimum values measured since their last resetting by the user.

In both display rows you can see the maximum values measured since their last resetting by the user.

Alarm condition - this item provides instant information that at least one of the alarms which have been preset is active. Alarms can be generated by exceeding the limits that have been preset in individual channels. Moreover, they can notify of a device failure. In the device configuration you can preset which conditions should be considered as alarm generating. By means of the upper key you can easily browse through the values measured in all device channels (if enabled in device configuration). In the case that the value is preceded by a bell-like icon, the preset limits (alarms) have been exceeded in this channel.

GSM modem active - this symbol indicates that a power supply has been connected to the GSM modem because of some online work.

Battery condition - this symbol provides overview information about the current battery charging condition. The charging is indicated by flashing one of these symbols.

Battery conditions during battery operation of the device:

Fully charged battery

Partly discharged battery

Heavily discharged battery

Totally discharged battery, the device will be switched OFF.

Battery conditions with a charger connected to the battery:

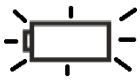

Blinking symbol of an empty battery. There was a deep discharge of the battery, the charger is attempting to recover battery. If this condition persists for a long time and the standard charging process is not renewed, contact your service department. The battery will have to be replaced.

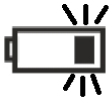

Indications of individual charging steps when the charging process takes place in a standard way. If the display shows the symbol of a full battery, the battery is fully charged and the charger can be disconnected.

A failure has been detected during charging and the charging process has been broken off. Try to remove the failure by disconnecting and reconnecting the charger. If the problem persists, call the service.

Wait, the charger performs internal testing, or the temperature inside the device is not within the allowed charging range (0 to 40°C).

USB interface active – the icon indicates that the device has been connected to the computer.

Measured value (upper and lower row) - the currently measured value(s) (or the Min/Max values) are displayed, if the corresponding symbols in the upper display section are illuminated. The unit name and the measured value symbol (1, 2, 3, 4, INT, EXT) are preset by the manufacturer, the user cannot change them. In addition, it is factory preset whether the measured value of a particular channel will be displayed in the lower or upper display unit row. On the other hand, the user has many possibilities to adjust the appearance and behaviour of individual „screens“. Controlling them can

take place only manually by the aid of push buttons situated beside the display unit. The upper push button serves to toggle between the measured values („the screens“):

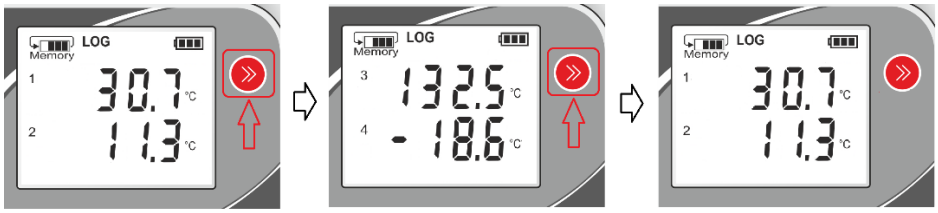

The lower push button serves to toggle between the currently measured values and the Min/Max values:

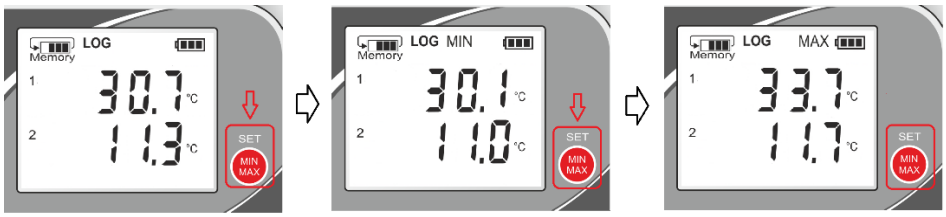

The device can also be set up to toggle the „screens“ automatically, in for about 5 sec interval. The cycle can be interrupted by pressing a key. If you do not want to use the keypad, you can disable it in the device settings.

Display warnings:

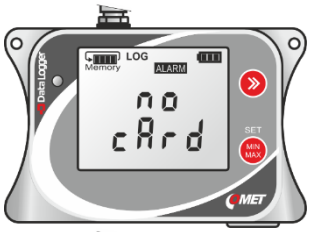

Displayed when no SIM card is inserted

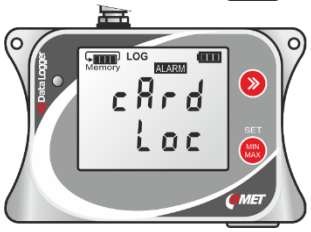

Displayed if the card requires you to enter the PUK code. This condition may occur e.g. if a PIN is activated on the SIM, but PIN code stored in the device configuration is not valid.

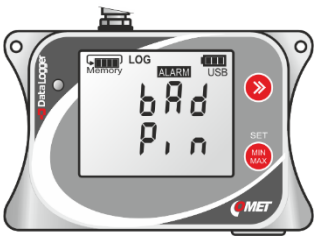

The SIM card requires a PIN code but the PIN is not set/enabled in the SW configuration (Default).

Menu Options

The menu can be entered by pressing a combination of both keys. In any case, using the keypad must be enabled in the device configuration. Individual menu items, too, may be disabled in the device setup. It is e. g. possible to switch on the device in this way, but it is not possible to switch it off.

To enter the menu:

Press the lower key and hold it pressed for about 3 s, until bottom menu line appeared. Then release this key immediately and shortly press the upper key during the following 4 s.:

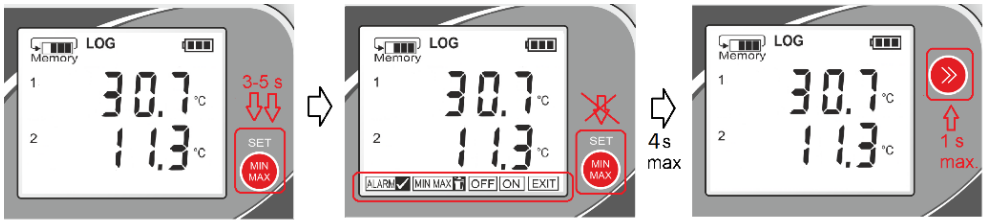

You can now work with individual menu items. Press the upper key to scroll through the menu items, press the lower key to confirm (SET). After confirming certain choices, the menu will be quit automatically. If the keypad is inactive for more than 20 s, the menu will close automatically.

Menu items:

ALARM✓ Deactivation of the optical (LED diode) and acoustic alarm signalling. In the case that the alarm signalling is active, it will be terminated by generating a new alarm. In the device configuration it must be allowed to disable this signalling from the device keypad. If alarm memory (*Latched alarms*) is ON in the device, the signalling will be deleted.

MIN MAX Deleting the Min/Max values in the device and it is related only to values obtained since last reset. This does not concern those recorded Min/Max values obtained in some other way. Option must be enabled in the SW device configuration.

OFF Switching the device off. This item is available only if the device is ON. Option must be enabled in the SW device configuration.

ON Device switching-on. This item is available only if the device is OFF. Option must be enabled in the SW device configuration.

EXIT Closing the menu.

Models produced

The models produced differ from one another by types and ranges of values to be measured. The datalogger's input channels are invariably assigned to these values. The user cannot change the type and range of the values to be measured. If GSM communication is used, it is necessary to pay attention to a sufficient level of GSM signal at the location.

U0110M

One-channel thermometer

This model is equipped with only one internal temperature sensor, no additional probes and sensors can be connected. It is characterized by a simple and compact design and a relatively long response to a temperature jump. The device is placed directly in the measured space. During the charging period the measurement accuracy may be affected by up to 1 °C due to parasitic heat.

U0141M

Four-channel thermometer for external probes

This model can measure up to four temperature values transmitted by Pt1000/E series external probes. The response to a temperature jump depends on the connected probe design. As a rule, this model is few times faster than that using the inner sensor. It is often used to monitor locations where the device itself is not directly in the measuring space and only probes are in. The maximum length of each probe lead should not exceed 15 m. It is recommended to use shielded cables. To maintain the IP rating, the unused probe connectors should be provided with a supplied closing cap.

U3120M

Compact thermometer - hygrometer

This model is designed to measure temperature, relative humidity and dew-point temperature by internal sensor, no additional probes or sensors can be connected. It is characterized by a simple and compact design and a relatively long response to a temperature and humidity jump, compare to model with external probes. The sensors are located under the grid on the front of the unit and are protected with Teflon foil. Foil permits water vapour but prevents water from permeating the liquid state. The device is suitable for measuring in places where there is no rapid change in temperature or relative humidity, and there is no condensation of water vapours. If water vapour condensation occurs inside the datalogger, then the resulting water will remain there and may damage its electronics. The device is placed directly in the measured space, while the installation needs to ensure sufficient level of GSM signal at the installation location. As the internal battery creates a parasitic heat during the charging period, the measurement accuracy may be affected by up to 1 ° C. The calibration of this instrument in the laboratory is recommended with the open bottom part of the battery box, to allow airflow from the back of the electronics. When airflow in the range 0.5 – 1 m/s, read the value after approx. 4 hours. *The closed device reaches a difference of approximately 2 %RH when inserted in the humidity chamber, then dramatically slows down. Precise reading takes many times longer time than with the open rear lid.*

U3121M

Thermometer – hygrometer for external probe

This model measures temperature, relative humidity and dew point temperature using an outdoor COMET Digi/E series probe. Its response to the temperature or relative humidity jump is significantly faster than by models with internal sensor. This model is often utilized to monitor areas in which only the probe is installed, whereas the main unit is installed elsewhere. When monitoring remote areas, the maximum probe line wire must not exceed 15 m. The Digi/E series probes provide calibrated measurement values. Hence, they may be replaced without having to modify the device setup.

U3631M

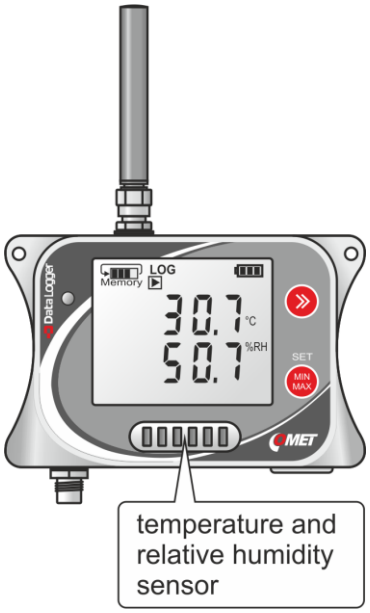

Compact thermometer - hygrometer with optional external temperature probe

This model is designed to measure temperature, relative humidity and dew-point temperature by internal sensor, moreover one additional external temperature probe Pt1000/E can be connected. Internal sensors are located under the grid on the front of the unit and are protected with Teflon foil. Foil permits water vapour but prevents water from permeating the liquid state. The device also measures the temperature from an external probe and the difference between this temperature and the dew point temperature. If the surface temperature of the material is measured by an external probe, the risk of condensation of water vapor on the surface to be measured can be determined immediately. The device alone is suitable for measuring in places where there is no rapid change in temperature or relative humidity, and there is no condensation of water vapours. If water vapour condensation occurs inside the datalogger, then the resulting water will remain there and may damage its electronics. The device is placed directly in the measured space, while the installation needs to ensure sufficient level of GSM signal at the installation location. As the internal battery creates a parasitic heat during the charging period, the measurement accuracy may be affected by up to 1 ° C. The calibration of this instrument in the laboratory is recommended with the open bottom part of the battery box, to allow airflow from the back of the electronics. When airflow in the range 0.5 – 1 m/s, read the value after approx. 4 hours. *The closed device reaches a difference of approximately 2 %RH when inserted in the humidity chamber, then dramatically slows down. Precise reading takes many times longer time than with the open rear lid.*
The maximum length of each probe lead should not exceed 15 m. It is recommended to use shielded cables. To maintain the IP rating, the unused probe connector should be provided with a supplied closing cap.

U4440M

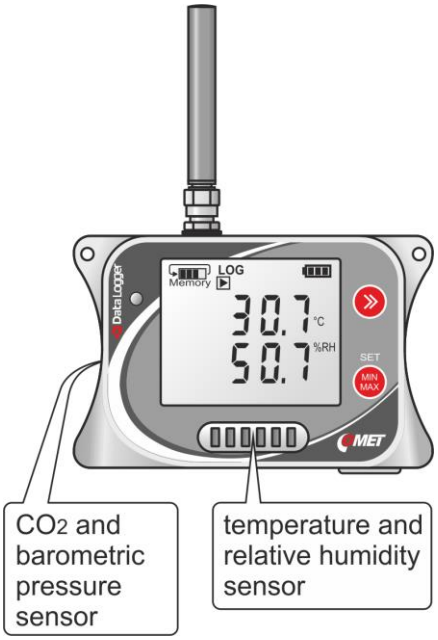

Compact thermometer - hygrometer - pressure gauge - CO_2 concentration meter

This model is designed to measure temperature, relative humidity, dew-point temperature, barometric pressure and the concentration of CO_2 in the air by internal sensors. Barometric pressure can be measured as absolute or recalculated to sea level. No additional probes or sensors can be connected. It is characterized by a simple and compact design and a relatively long response in the measured quantities, compare to model with external probes. The sensors are located under the grid on the front and side of the unit The device is suitable for measuring in places where there is no rapid change in temperature or relative humidity, and there is no condensation of water vapours. The device is placed directly in the measured space, while the installation needs to ensure sufficient level of GSM signal at the installation location. As the internal battery creates a parasitic heat during the charging period, the measurement accuracy may be affected by up to 1 ºC.

In battery mode, this model has significantly shorter battery life than models without CO_2 concentration measurement. For this reason, the measurement of CO_2 concentration does not occur as often as the measurement of other variables. By default, this is 2 minutes with the option of extending up to 10 minutes (option available in the Vision software).

We recommend that calibration of the relative humidity and temperature of this device in the laboratory be carried out with sufficient air flow (at least 1 m/s), but only after a thorough settling, which may take up to 4 hours.

Due to low IP20 protection, this device is not suitable for dusty or water-borne areas.

U8410M

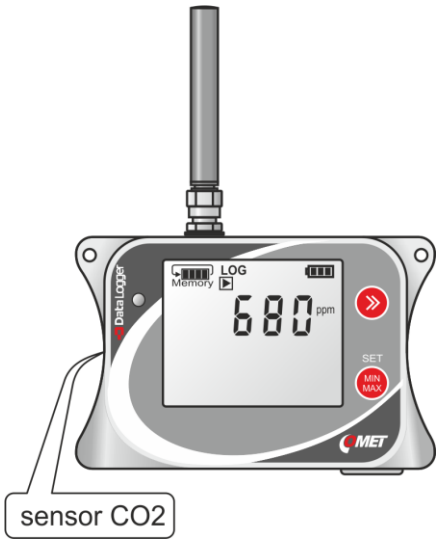

Compact CO_2 concentration meter

This model is designed to measure concentration of CO2 in the air by internal sensors. No additional probes or sensors can be connected. It is characterized by a simple and compact design and a relatively long response in the measured quantities, compare to model with external probes. The sensor is located under the grid on the front and side of the unit. The device is placed directly in the measured space, while the installation needs to ensure sufficient level of GSM signal at the installation location. In battery mode, this model has significantly shorter battery life than models without CO2 concentration measurement. The measurement of CO2 concentration occurs 2 minutes standardly with the option of extending up to 10 minutes (option is available in the Vision software).
Due to low IP20 protection, this device is not suitable for dusty or water-borne areas.

U0843M

Two-channel binary-input thermometer for external probes

This model can measure up to two temperature values, which are sensed by outdoor Pt1000/0 series probes. In addition, it is provided with two binary inputs for monitoring voltage-signal changes or changes of a signal coming from a voltage-free contact. The binary input changes are registered immediately, irrespectively of the recording interval setting. To safe record the input status, the signal must be present for at least 1 s. Binary inputs of this device are not able to capture connected/disconnected voltage status. Input signals are connected to a connecting block. The response to a temperature jump depends on the probe design. As a rule, this device is few times faster than the inner-sensor model. The maximum length of the probe line wire should not exceed 15 m; the maximum length of the binary-input cable should not exceed 30 m. It is recommended to use shielded cables. The device's ingress protection is IP 20. Due to low ingress protection the device is not suitable for using in dusty rooms or rooms exposed to water ingress.

Connection mode:

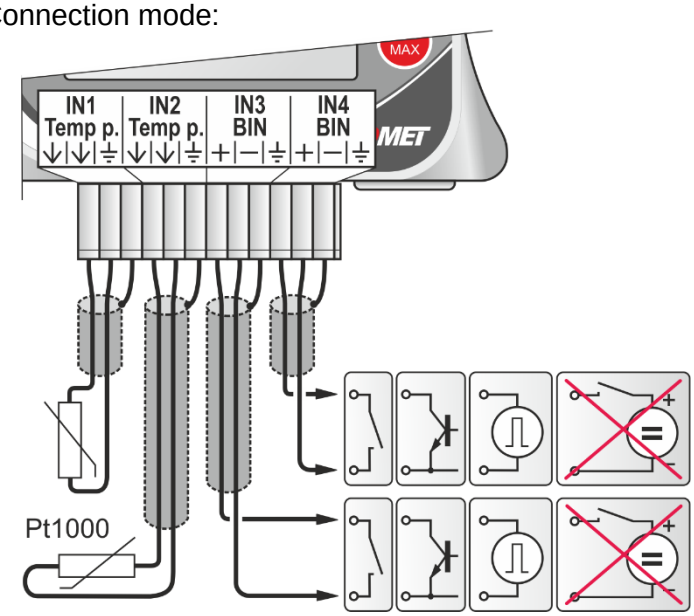

For the procedure for connecting wires to the connecting block refer to Annex 4.

U6841M

Datalogger with 3 inputs 0 - 20 mA and 1 binary input

This model is used to measure up to three signals from current loops (0 to 20) mA DC while allowing one binary input to be monitored. The current inputs are passive and are not galvanically separated from one another. This means that the connected sensors cannot be connected to the current loop and the negative terminals ("-") are connected to each other. These facts must be taken into consideration when designing the device into the circuit. Incorrect connection may cause degradation of the measured values. Standard outputs (4 to 20) mA can also be measured with current inputs without any problems.

Binary input serves to monitor voltage signals or signals coming from a voltage-free contact. The binary input changes are registered immediately, irrespectively of the recording interval setting. To safe record the input status, the signal must be present for at least 1 s. Unlike the U0843M model, this input can capture connected/ disconnected voltage status.

Input signals are connected to a connecting block. The device's ingress protection is IP 20. Due to its low ingress protection the device is not suitable for using in dusty rooms or rooms exposed to water ingress. The maximum length of the input wires should not exceed 30 m. It is recommended to use shielded cables.

Connection mode:

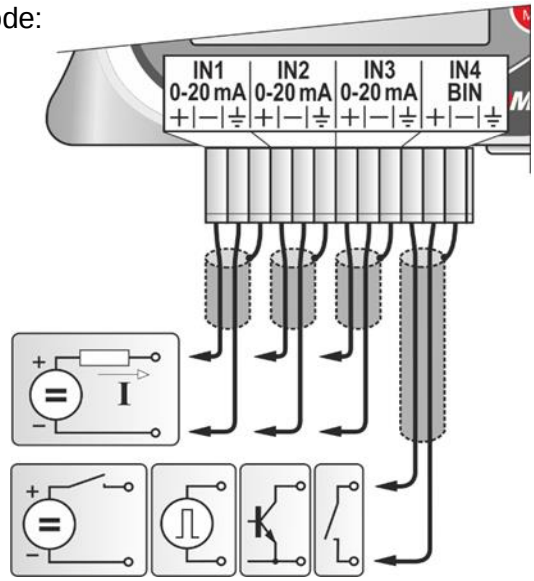

For the procedure for connecting wires to the connecting block refer to Annex 4.

U7844M

Two-channel binary-input counter

This model includes four inputs. Two of them can function as counters, and all four inputs can function as binary inputs. Both counter and binary inputs serve to monitor voltage signals or signals coming from a voltage-free contact. The binary input changes are registered immediately, irrespectively of the recording interval setting. To safe record the input status, the signal must be present for at least 1 s. Unlike the U0843M model, binary inputs can capture connected/disconnected voltage status. The counter states are recorded according to the set Record *interval*. Input signals are connected to a connecting block. The device's ingress protection is IP 20. Due to its low ingress protection the device is not suitable for using in dusty rooms or rooms exposed to water ingress. The maximum length of the input wires should not exceed 30 m. It is recommended to use shielded cables.

Optional input configurations:

- 2 x counter + 2 x binary input
- 1 x counter + 3 x binary input
- 4 x binary input

Connection mode:

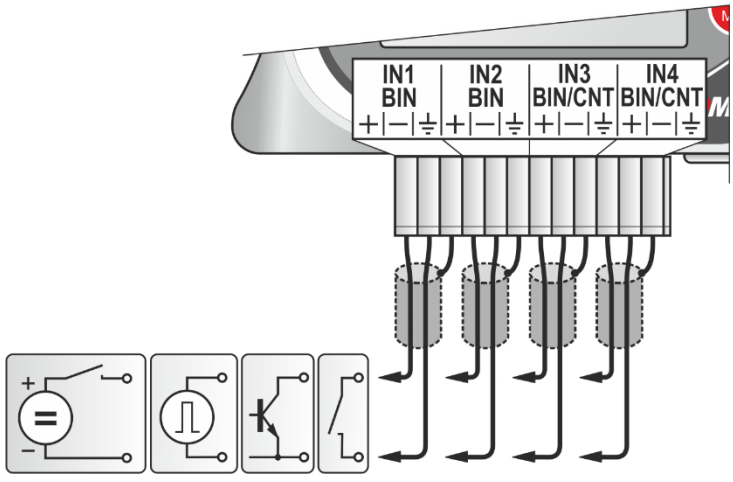

For the procedure for connecting wires to the connecting block refer to Annex 4.

COMET Vision program

Minimum HW and OS requirements

- Windows 7 operational system and higher, or Windows Server 2008 R2 operational system and higher
- 1.4 GHz processor speed
- 1 GB memory

Program description

The *COMET Vision* program is used to set up COMET devices, to obtain the recorded data and the currently measured values.

The program is available free of charge (www.cometsystem.com), any number of devices can be connected simultaneously (e. g. data from several devices can be downloaded concurrently; several online displays may be running at a time). Moreover, some advanced features are available (e. g. graphs, statistic previews of registered data, user-defined online display, export into a database etc.).

The starting point for the program control is the menu situated in the left (optionally right) portion of the utility software and containing the basic options „Home“, „Devices“, “Files”, „Online display“.

Adding the datalogger to a list of the COMET devices

The USB-connected device is automatically detected within approx. 5 seconds (required for connection initialization time). When connected to a computer, the device is automatically added to the COMET device list.

A device can be added manually after clicking on the „Add device“ button. This can be found in the „Welcome“ screen, which is displayed upon the first program launching, later in the „Home“ or „Device“ tabs . A screen containing a connection type choice will appear. Here, USB should be selected. Subsequently, after „Finish“ button confirmation, the device will be added.

Setting up the device

After the datalogger has been switched on, it starts measuring, data recording and evaluating alarms according to the device's setting up performed by the user. Complete device setup can be performed by the aid of the *COMET Vision* user software (hereinafter SW). During configuration editing the device can work normally, nevertheless the access to some functions (record download, contemporary configuration editing by other users) is limited.

How to set up the device by means of a program

- Connect the datalogger to a computer, run the user SW.
- after starting the program you will see all currently connected devices in the device list. Note: if you had SW on first and connected the datalogger then it will be automatically added to the instrument list.
- select the device you want to set up. The Device Home panel displays its current status and device information.
- Click on the *Configuration* button. The device configuration will be downloaded; you will be able to view it.
- If you change the setup of some item, the SW will pass over into the editing mode. The other users' access to the device will be limited during the editing procedure.
- In case of a longer idle time the configuration editing mode will close automatically.
- Finally save the new configuration into the device (*Apply changes*).

The device setup from a program (Configuration)

General - Information

In this panel basic device information is available. Here is above all its name (*Device name*), which serves to identify the device and the measurement values it provides. You can name the device e.g. according to its location or utilization, or you can leave its original setting. The maximum length of this description, in which you can use letters, numerals, underscores and further signs, is 31 characters. More information, which is indicated in this panel, is the device's serial number, model, firmware version and information, whether the model contains an internal modem to send SMS messages.

General - Preferences

In this panel you can choose the unit with which the device will measure the temperature (*Default temperature unit °C/°F*). With some devices the pressure unit can be chosen, too (*Default atmospheric pressure unit*). When the device does not measure the atmospheric pressure, but when it is necessary to know its value to measure some quantities (calculated humidity and CO_2), the atmospheric pressure value must be entered (*Default value of atmospheric pressure in the area according to altitude*).

With barometers, the correction constant can be entered here for conversion to the equivalent sea level pressure. This constant can be entered either as a current pressure converted to the sea level found out e.g. at a near observatory, or through the medium of the elevation above sea level.

General - Data and Time

Here you can set the date and time running inside the device (*Date and Time*). In the datalogger local current time is running according to your setting. By means of the *UTC Offset* choice you can fix its relation to the UTC. This information will be available for all time data provided by the device. The device cannot automatically pass over between summer and winter time.

CAUTION - after changing date and time the data recorded by the device will be deleted!

Advanced - LCD Display

In this panel you can set a variety of display and keypad behaviour modes.

Advanced – Other settings (Keypad, Device start, Energy)

In this panel you can set some functions of the datalogger's buttons, a delayed switching-on of the datalogger or the control of its switching-on by a binary input (according to type). In addition, the datalogger's switching-on and/or off by a button on the datalogger panel can be enabled or disabled.

In the standard mode the datalogger measures all channels using an interval of 10 s. This interval can be shortened to 1 s when a faster measuring procedure is required. A disadvantage of this mode is a higher power consumption. When the device is operated for a long time, there is no need for a fast response to the change

in the measurement values and a long battery lifetime is what matters, you can set the measurement interval to 1 minute. The CO_2 concentration channel measures with a 2-minute interval and can be extended up to 10 minutes to save more battery life. For details concerning power consumption, see Technical parameters.

Record

The choices that are available in this panel serve to control the device‘s recording functions. The recording function may be switched on and off when needed (*Recording with interval*). However, if you switch the recording off and then you switch it on again, the memory free space may be reduced by up to 0.2 % of its total capacity. Use *Cyclic record* in the case that you require the device to continue recording even if the measurement data memory is filled up with data. In this case the oldest data is gradually overwritten by the newer data. If you do not use this choice, the data recording will be stopped on reaching the full storage capacity. Another important parameter is the *Record interval*. It can be set from 1sec/10sec/1min (according to settings in Advanced – Other settings (Energy) - Measurement Interval) to 24 hours (See Technical parameters). The recording takes place every time at integer multiples of the pre-set interval. For example, if you switch the device on at 5:05 and the recording interval has been set to 1 hour, the first data will be recorded at 6:00, the following data at 7:00 and so on.

The data recording can take place either incessantly, or only in the instant when some of the measurement values gets into an alarm condition (system alarms do not trigger the recording). Choose *Record mode.*

By default, the device records instantaneous readings at a preset recording interval. Another option is to select the record "average, minimum and maximum values per recording interval". Example: the selected recording interval will be 1h, then every 1h the three values - average, minimum, and maximum - will be stored for the past hour. Therefore, the next three values are saved again in an hour and will correspond to the values in the last hour interval. Attention - these Min / Max values are only related to the selected recording interval and are different from the global Min / Max values displayed on the instrument's display (these are for the entire period of operation since their last manual reset).

The record setting is completed by choosing measurement channels that are supposed to be recorded.

CAUTION - After changing cyclic ⇔ non-cyclic recording (in either direction) the data recorded in the device is to be deleted! SW warns you when saving a new configuration and gives you the option to save data.

Channels

In this panel you can set all input channels. The assignment of the measurement value and its range to a channel is factory-set and cannot be changed. Supply a suitable name of the location to be measured for each channel and decide whether it will be switched on for measurement and for recording.

Further items, like those for entering the decimal place number, the name of the physical unit and the conversion of the measurement values by means of the so-called *User calibration* are available in channels with voltage and current inputs only. In these inputs no physical quantity unit is displayed on the device's LCD display. If the value cannot be displayed on the device's display for a large number of digits, then Hi (if greater than the displayable number) or Lo (if less than the displayable number) is displayed. However, this error message only concerns the display on the device display, not the measurement and recording.

An example of user-defined calibration for a sensor having a 4 to 20 mA current output. The sensor is connected to the datalogger's current input; the sensor's measurement range is -30 to +80 °C:

Lower point A: Input value: 20 will be shown as 80
Upper point B: Input value: 4 will be shown as -30

In a channel for external Pt 1000 probes there exists the possibility to enter the probe parameters to correct the measurement error caused by probe cable length.

In binary channels you can decide whether a voltage signal or a contact (an open-collector transistor) will be connected to the input. Then enter textual descriptions of the states for both input levels. In this way the states will be displayed in the record, in the online display, and in this manner they will be sent in SMS messages, too. At the same time, from the menu, choose symbols for displaying these states by the device.

For a counter channel, decide whether to report an error or continue from zero after it is overflowed. The range is 24 bits, it means max. 16 777 215.

In the next step, set alarm states for each measured variable. You can set up to 2 alarms for each measured quantity (alarm 1 and alarm 2 buttons). Each alarm must be enabled (on/off) first.

Furthermore, choose whether the alarm should arise from exceeding the limit value or from dropping under it (*value is greater than / value is lower than*). Enter this limit value. In binary inputs, only the input state must be defined. Subsequently, the alarm delay time must be entered (*for the duration of)*. This delay time serves to eliminate contingent

momentary overshoots of the limit value. The hysteresis, too, has a similar significance (*Alarm hysteresis*). It prevents the alarm from oscillating in the case that the measurement value varies around the alarm limit value. It is not recommended to set it equal zero.

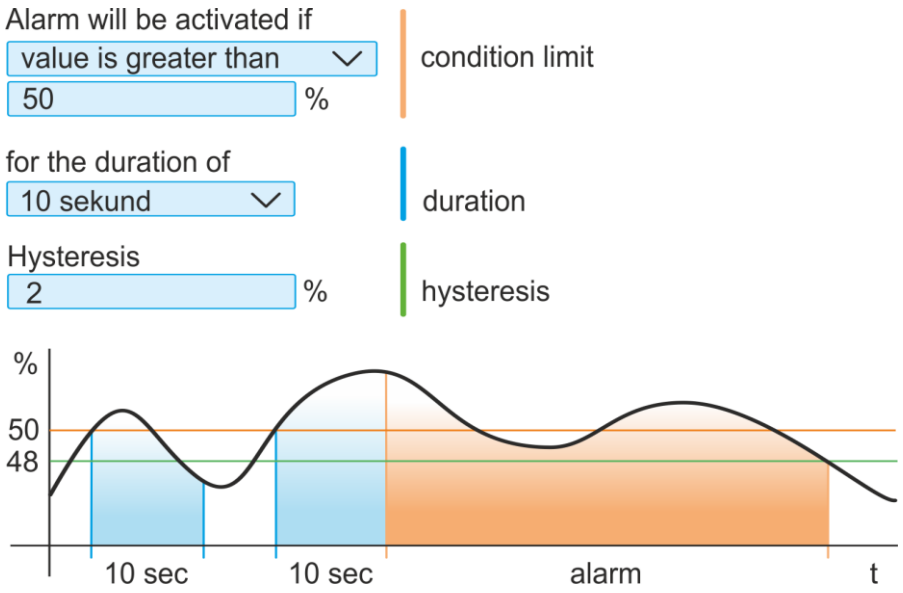

Thus, the setting for generating an alarm is completed. It remains to decide, whether the alarm should be indicated optically by means of a LED diode on the device (*Optical signalling - LED*), acoustically (*Activate internal acoustic signalling)* or by sending a alarm text message to up to four selected recipients (when alarm occurs/disappears, send *SMS to selected recipients*).

In SMS messages you can determine whether they are supposed to be sent out on alarm generation and on alarm disappearance, too. In both cases add a custom text description of the status that the recipient will see in the message.

Alarm events

The device makes it possible to evaluate alarm situations, which can either originate from the measurement data, or they can notify of a certain device condition (exceeding the memory occupancy limit, system alarms). The individual alarm situations can be assigned the way of their signalling to the user.

An alarm originating from a measurement value is every time signalled on the device display by means of a bell icon ahead of the corresponding measurement value. General information about any alarm occurring in the device is displayed by **ALARM** warning on the device display (except for an exceeded memory occupancy limit, which is signalled by a flashing **Memory** sign).

An alarm can be signalized by a fast flashing of the LED diode on the device panel (Optical signalling - LED). In the case that only one alarm originating from a measurement value is active, a yellow LED is flashing. In the case that more alarms occur simultaneously, or a system alarm or an alarm originating from an exceeded memory occupancy limit occur, a red LED diode is flashing. NOTE: A blue flashing LED diode does not notify an alarm, but the communication of the GSM modem with the operator's network.

Besides, an alarm may be signalled acoustically by a characteristic sound, which is repeated at regular intervals. If the device is connected to an external power supply, the acoustic signal is more intense than with battery power.

The operator alerted this way can confirm the acoustical or optical (LED diode) signal and so mute it until a new alarm occurs (See the chapter *Controlling the datalogger from a keypad*).

Alarm events - Preferences

In the standard mode the alarm lasts only during the time when the measurement values lie outside the allowed limits. As soon as they return inside the allowed limits, the alarm will cease. In some cases, it is desirable for the user to be informed of an alarm that has occurred during his absence. If you enable the *Latched alarms* choice in the device setting, then every alarm occurring in the device remains active until operator intervenes, irrespective of the measurement values (i.e. until the time of manual cancel).

Moreover, alarm evaluation may be enabled here for selected days of the week only and for certain hours of the day. This setting can also be used for system alarms, but it should not be combined with the above described option *Latched alarms*.

Alarm events – Mute of signalling

In this panel you can enable the alarm to be deleted and remotely deactivate the alarm signalling both from the SW and from the device keypad. Furthermore, optical (LED) or acoustical alarm signalling can be enabled/disabled here.

Alarm events - Memory occupancy

Use this panel setting, if an overrun of the pre-set limit value of the data memory occupancy needs to be signalled. The signalling mode may be selected optionally as optical (by means of a LED diode), acoustical,

or it may be realized by sending a warning SMS message up to as 4 selected recipients.

Alarm events - System failure

These panel choices make it possible to set the so-called system alarms, which indicate some technical failure of the datalogger or of some of the probes connected to it. The signalling mode may be selected optionally as optical (every time by means of a red LED diode), acoustical, or it may be realized by sending a warning SMS message up to 4 selected recipients.

The device can respond to the following conditions:

a) *Measurement error on any channel* ..... e. g. a probe has been disconnected or broken.

b) *Device configuration error* ..... the device configuration has been disturbed unexpectedly.

c) *External power failure* ..... the USB connector of the device can be used to charge the battery or it can be permanently connected to external power (USB charger or computer). This state can therefore be used as an external power failure indicator.

d) *Low battery* …. it informs that it is necessary to connect external power and charge the internal battery, see chapter “Running the device - Charging the batteries”.

e) *Time setting error or battery is* discharged …. the battery has run out of charge.

Modem - General

In the configuration enter the PIN code for your SIM card, if required (given by the settings of the SIM card used). By default, your device is set to not require the PIN code. If the PIN code is set on the SIM card and the required pin is set incorrectly in the device configuration, the SIM card will be blocked when attempting to connect to the GSM network, see **Display warnings** chapter. This option does NOT change the PIN code settings on the SIM card, only the PIN code required for the SIM card is entered here.

Modem – Text message - General

In the case that the alarm condition persists for a longer time, determine whether the warning text message should be sent on the alarm inception only, or whether it should be repeated. The repetition interval can be pre-set in a range of 30 minutes to 24 hours.

Specify the total daily limit for the number of SMS messages sent from the device (ie the maximum number of sent SMS messages per day for both battery and external power together) and the maximum daily limit for the number of messages sent in battery mode (to conserve battery capacity). Before sending a message, the daily limit value will be ascertained. Should the limit value be reached, the respective recipient will receive a message indicating that the daily limit of the outgoing messages has been reached. For the day in question no further messages will be sent to the recipient's number. When it is required to send the message to another recipient, only a notification is sent about the daily message limit error. No further messages will be sent out to this recipient's number on this day. The daily limit will be reset at time 00:00.

If you want alarm text messages to be sent, remember to assign the pertinent recipients of these messages to the particular alarms. This concerns alarms on measurement channels, system alarms, as well as warnings about exceeding the data memory occupancy limit. This assignment is to be performed during setting the individual alarms.

Modem – Text message - Recipients

In this panel you can set the recipients of the SMS messages. You may enter up to 4 recipients of text messages that the device will work with. Each recipient is identified by their name, telephone number, additional text and an activity flag. *If you clear this flag, text messages will not be sent to the selected user, but all its settings will remain unchanged. This way you can easily deactivate a user in a simple manner and restore it later.*

Modem – Text message - Keep alive SMS

In this panel you can set Keep-alive SMS sending parameters. It means sending information messages **at regular intervals**, regardless of alarm status.

Set the interval for sending *Keep-alive* text messages. Such messages can be sent by the device to all selected recipients on regular interval basis. They include the datalogger identification, the current measurement values of all channels as well as the conditions of all alarms. These messages can contain user-readable data or alternatively machine-readable data. . For more detail see Appendix 5: SMS message format. The shortest interval that can be set is 5 minutes; the longest interval is 1 week. With intervals that are longer than 1 day a daily message sending time can be set.

Determine which recipients the informative *Keep-alive* text messages with user-readable data should be sent to. An easy readability by a mobile phone is an advantage of this kind of messages. The disadvantage is that larger reports can be divided into several messages. These messages will not be sent out if no recipient has been chosen.

Determine which recipients the informative *Keep-alive* text messages with machine-readable data should be sent to. These messages are suitable for machine processing in customer's systems. All data is every time compressed into a single message. This data is not suitable to be read on a mobile phone. These messages will not be sent out if no recipient has been chosen.

Modem – Data - General

In this panel, you configure the APN settings needed for data communication with your mobile operator (sending data messages). Contact your SIM card supplier for this information.

If you are using your own data collection system, the "JSON version" option allows you to set the older data message format to be backward compatible with the older data collection system with new devices. This option is to maintain the backward compatibility of newer devices with the older collection system, without having to update it.

Modem – Data – Data sending

This panel sets where and how often messages will be sent. You can send the data:

- Periodically in preset interval. The interval is selectable from 5 minutes to once per week and you can set different interval when battery powered and when it have external power available.
- Asynchronously (immediately) when preset alarm occur.

For battery mode you can select „Buffered mode" option which collects data into internal buffer and then sends them together in preset interval. It sends more data at once and saves battery life. On the other hand the data is received with higher delay.

In the URL field, enter the destination address where you want to send messages. For use with COMET Database, type the address of the SOAP server, see chapter 8.2 Automatic data sending to the database in Comet Database manual (e.g. *http://192.168.1.1/soap*).

If the user wants to realize his own collection system, the manufacturer can offer php scripts for message processing.

Security

When this service is activated in the device configuration, the user is prompted to set the password for the highest user - **Administrator**. Subsequently, the device allows users to activate **User1**, **User2** and **PowerUser** and set their own login passwords.
The rights of each user are listed in the following table:

User	Rights
Administrator	- Edit all parameters of device configuration - Download and erase recorded data - Go to service mode
PowerUser	- Edit device configuration without security parameters, change device time setting - Download and erase recorded data
User2	- Download and erase recorded data - Switch On/Off device
User1	- Download recorded data - Switch On device only (cannot switch it Off)

From the moment the configuration is saved to the instrument, the instrument will require a username and password each time it is connected to the SW. You will not be able to connect the device without entering this information.

Summary

Printable summary of all device setting.

Application notes

Operation with a constantly connected charger

Datalogger is primarily intended to be operated as an autonomous unit powered by its built-in batteries. Nevertheless, you can also operate it with a charger which is constantly connected to it, or with a computer. The datalogger's internal charging circuitry controls the battery charging process based on its instantaneous condition, thus protecting it against damage. In the case that a cable is connected to the USB connector, the device is not protected against dust and water ingress, and, consequently, it cannot be operated in locations in which such ingress protection is required. The internal charging circuitry initiates the battery charging only when the device's internal temperature ranges between 0°C and 40°C. If this is not the case, the battery will not charge even if the charger is connected.

Device switching on and off

If you switch on and off the device frequently, then its keypad and both functions, i.e. device switching on and off from the keypad, must be enabled in the device settings. Another option is to set the date and time when you want the device to turn itself on automatically. Once reached, it will be permanently switched on. For binary input dataloggers, it is possible to control the recording on and off by the level at this input (voltage or contact).

Measuring calculated humidity values

From among the calculated humidity values the device can provide the dew-point temperature only. Other relevant calculated humidity values can be obtained by subsequent data processing in the SW.

What is the purpose of the system alarms and how to work with them

System alarms are useful for performing the functionality diagnosis of the device and of the probes connected to it. A system alarm notifies of a failure or damage of the device or of its probe. On the contrary, alarms on measurement values indicate a failure of the technology the device is monitoring. A system alarm may be intended for e.g. another person than that receiving measurement value alarms.

Problems with measurement correctness

Incorrect measurement values of temperature or relative humidity may, in most cases, be caused by an unsuitable probe location or improper methodology. Some notes concerning these problems are mentioned in the following chapter *Recommendations for operation and maintenance*. In probes using current and voltage outputs incorrect measurement results may be induced by latent coupling between individual components, e.g. across supply sources or through improperly connected cable shielding.

If the device indicates an error condition, see detailed information in *Annex 1, selected error messages*.

Another problem area relates to random peaks occurring within the measurement values. Their most frequent reason is a source of electromagnetic interference situated near the device or the pertaining cables. Attention must be paid also to possible damaged portions of the cable insulation. Prevent accidental contacts between wires and adjacent conductive parts.

Problems arising during communication with a computer

For communication with a computer a cable should be used that is not longer than 5 m. Check that all connectors are properly seated. It is especially the USB-C connector that must be properly pushed into the receptacle. Cable disconnecting and subsequent connecting during communication can cause a temporary non-availability of the USB equipment in the computer. This may be corrected by closing the *COMET Vision* utility program (including the communication service) and starting it subsequently. Restart the computer, if the above mentioned measure is not the proper remedy. Check whether new HID equipment will appear in *Device administrator* after the device has been connected to the computer.

Problems arising during sending SMS messages

There are a lot of problem sources in this connection. If sending text messages does not work at all, you may try out the following steps:

- Set an alarm on some of the channels so that it might be induced easily (e.g. temperature alarm by warming the probe by holding it in hand, relative humidity alarm by taking the device in hand on the sensor side) and assign an SMS recipient to this alarm.

- Induce an alarm condition and follow the behaviour of the blue LED diode. After switching the modem on the diode should start flashing

fast for a short time (registration in the network), then more slowly (message sending) to finally go off (finishing).

- If the blue diode does not start flashing at all, then the datalogger‘s radio section has not been activated at all. It may be caused by an improper setting: A non-functioning SIM card has been inserted, the SIM Card has been blocked because a wrong PIN has been entered, the alarm is not activated at all, no phone number is assigned to the alarm, and the like). Verify whether the SIM card is protected by a PIN code. If this is the case, verify if the code has been entered properly in the device configuration.

    - Make sure the SIM card is properly seated in its holder. Make sure the holder is locked.

    - Insert the SIM card into the mobile phone and verify that the SMS messages function properly. Try the same phone numbers as those you have stored in the datalogger.

    - Verify whether the datalogger aerial is not damaged and whether it is connected correctly.

    - Contact your service department (possible failure diagnostics, wrong interconnection of internal component parts, …)

- If the blue LED flashes quickly, but it does not pass over to a slower frequency, then the modem probably failed to be registered in the network. Find out if there is sufficient signal intensity in the aerial vicinity.

- If the blue LED flashes quickly and then slowly to go out completely, the modem has not been registered in the network. The message has been sent out (but has not arrived), or it has been refused by the network. Try another phone number of the recipient, verify if you enter it in the international format (e.g. +420333222111). Verify in the configuration of the datalogger, that its name contains letters and numerals only. Do the same with the name of the measured channel and with the alarm settings in the user-defined descriptions of the SMS messages. Verify if SMS messages can be sent out from the respective SIM card: Insert it into the mobile phone and try to send a text message to the same number. Ascertain whether the message has been transmitted.

- Contact the service department in the case that you have not succeeded in finding the reason of the problem. Diagnostic records that are saved in the device could deliver further helpful information for resolving the problem.

Recommendations for operation and maintenance

Datalogger operation in several application areas

Before putting the device into operation, it should be considered, if its usage is suitable for the intended purpose. In connection with this consideration the device‘s optimum settings should be determined. In the case that the device is part of a larger measurement system, instructions for its metrological and operational checks should be developed

Inadvisable or hazardous applications:

This datalogger is not intended for such applications in which the failure of its functioning could directly endanger life and health of humans and animals, or the functioning of other equipment with life-sustaining functions. In applications the failure or malfunction of which could result in severe property damage it is recommended to provide the system with suitable and independent signalling equipment which is able to evaluate such a condition and, in case of failure, to prevent the above mentioned damages (See the chapter „*Safety measures and unauthorized manipulations“*).

Device positioning:

Adhere to principles and procedures mentioned in this manual. Try to choose such a place to position the device, where the negative influence caused by environment is as low as possible. When performing measurements in refrigerators, metal boxes, metal chambers and the like, it is every time advisable, as far as the device’s operation and reliability is concerned, to place the device outside, leaving only the sensors and probes inside the measured environment.

Positioning of temperature sensors:

These sensors should be placed in locations where sufficient air circulation is ensured and where the most critical location is supposed (according to the application requirements). To prevent heat conduction through the sensor cables from undesirable influencing the measurement value, the sensor must be properly inserted into the measured environment. *If you follow the temperature distribution in an air-conditioned storehouse, do not place the sensor into the direct air stream generated by the air-conditioning unit. As a matter of fact, the temperature distribution in large-chamber refrigerators may be quite inhomogeneous, the temperature differences reaching up to 10°C. Similar dispersion can be found inside deep-freezing boxes (e.g. in those used for blood preservation by deep freezing).*

Positioning of humidity sensors:

The positioning of humidity sensors depends again on the application requirements. Humidity measurements in refrigerators without additional humidity stabilization can be very questionable. When the cooling is switched on/off, there may be significant changes in humidity in the range of tens of percent, even if the mean value is correct. Moisture condensation on the ventricle walls is common.

Recommendations for metrological checks

Metrological verification is carried out according to the requirements of the particular application at intervals fixed by the user. In some cases, calibration must be performed by an independent laboratory that is accredited by the government.

Recommendations for regular checks

It is recommended to check the system in which the instrument is incorporated at regular intervals. Checking interval and inspection scope depend on the particular application and the user's internal regulations. In fixed installations following checks are recommended to be performed:

- Metrological verification;
- Regular checks fixed by the user;
- Judgement of all problems that has occurred since the last check;
- Visual check of the device, connectors condition, cover integrity;
- Functionality check (checking of features utilized by the application):
    a) Check of the transfer of the actual recorded value into the computer, record evaluation
    b) Functionality check of individual alarms. This should be done by changing the input quantity to give rise to an alarm. Then check it visually on the display. Check whether the SMS message has been sent (if used).
    c) Judgement of the battery condition on the display.
- Check of the cabling. To be checked: Condition of cable connections and cable surface integrity, proper cable routing, no additional parallel heavy-current conductors.
- Check of all sensors. This is to be performed visually. Check for water ingress, check for suitable sensor location with respect to correct measurement conditions and possible signal deteriorating by interference.
- The check results are to be recorded.

Service recommendations

Engineering support and service activities are provided by the device distributor. His contact person‘s address is given in the Certificate of warranty included with the product.

WARNING - Unskilled intervention into the device may lead to loss of warranty!

Technical parameters

Power supply

The device is supplied from an internal Li-ion battery, which is placed under the rear cover. The battery may be replaced by the producer or an authorized service provider only.

Battery

Battery model used:

BAT26001S2P Li-ion 2 PACK US18650VTC5 5200 mAh SONY (2x 2600mAh)

Operating lifetime relating to a single charge of the Li-ion accumulator:

Several months to several years according to the device setting and number of messages sent. Devices with a CO_2 concentration sensor have a higher battery consumption and therefore shorter holding time. Follow the battery status, recharge battery if necessary.

Battery charger

Recommended charger type:

Commonly used chargers, such as mobile phone chargers with a USB type C connector, such as Sunny SYS 1561-1105

Maximum current from the USB connector:

- Provided that the datalogger is connected to the computer and a successful enumeration takes place, the input current limit will be set to 500mA.
- If no successful enumeration takes place within 10 s after powering up the device (the device is not connected to the computer), then the input current limit is increased to 1500 mA. However, when the input voltage drops, the current drawn from the connector will decrease automatically.

Charging time:

Charging time depends on the current battery discharge level. Since the parasitic heat is generated when the internal battery is charging, the charging speed **with**

the power on is deliberately slowed down to prevent excessive influence of measured values. If you want to charge the device as soon as possible, turn it off first. When the device is turned off, the fast charging mode is automatically activated. Fully charged battery is indicated on the display of the device usually within 6 hours.

Charging conditions:

The charging process only runs when the internal temperature ranges between 0°C and 40°C.

USB communication interface

Compatibility:

USB1.1, USB 2.0, USB3.0

Connector:

USB-C

Measurement, data storage and real time circuitry

Measurement Interval:

10 s as standard
1 s in fast mode
1 minute in economic mode

Recording interval:

(1 s, 2 s, 5 s, 10 s, 15 s, 30 s)
1 min, 2 min, 5 min, 10 min, 15 min, 30 min,
1 h, 2 h, 3 h, 4 h, 6 h, 8h, 12 h, 24 h
You cannot select a shorter Recording interval than the Measurement interval

Storage capacity:

Maximum 500 000 values in non-cyclic record
Maximum 350 000 values in cyclic record

Radio section

The datalogger includes a GSM modem intended for data transfer and sending SMS messages. This modem is only powered up and registered in the GSM network only when SMS messages' sending off is required. Otherwise it is switched off.

GSM modem:

Quad-band 850/900/1800/1900MHz
GPRS Mobile Station Class B
Compliant to GSM Phase2/2+
Class 4 (2W @ 850/900MHz)
Class 1 (1W @ 1800/1900MHz)

Aerial input:

Connector: SMA, female
Impedance: 50 Ω
Aerial gain: 3 dBi max.
Aerial VSWR: < 1:2

Aerial:

Model: AO-AGSM-SMVS
Gain: 2 dBi
VSWR: < 1:1.8

SIM card:

The datalogger includes a slot for inserting a *micro*-sized SIM card. Use a suitable reduction if you own another sized card. The slot may be accessed after removing the datalogger‘s rear cover.

Parameters of datalogger inputs

U0110M

Measured value:

Internal temperature

Temperature range:

(-20 to +60) °C

Accuracy:

± 0.4 °C(*)

(*) *During battery charging temporary measurement accuracy deterioration may be found.*

Response time:

T63 < 6 min, t90 < 15 min (temperature jump 20 °C, air circulation ca 1 m/s)

Display resolution:

0.1 °C

Recommended calibration interval:

2 years

U0141M

Measured values:

4 x temperature sensed by an external COMET Pt1000/E series probe

Temperature range:

(-90 to +260) °C, Pt1000/3850 ppm sensor
Measuring current: ca 0.5 mA with pulses of ca 60 ms length

Input accuracy (without probes):

±0.2 °C in a range of -90 to +100 °C
±0.2 % of the measurement value in a range of +100 to +260 °C

The accuracy of the device with a temperature probe connected to it is determined by the above input accuracy and the accuracy of the probe employed.

Connection mode:

Two-wire connection with the possibility of compensation of the error caused by the cable resistance. The probe is provided with a 3-pin M8 ELKA 3008V connector. Its connection mode is shown in Annex 2.

The recommended length of the Pt1000/E probe cable is maximum 15 m, a length of 30 m must not be exceeded. Shielded cables are recommended.

Response time:

Is determined by the response time of the used probe.

Display resolution:

0.1 °C

Recommended calibration interval:

2 years

U3120M

Measured values:

Internal temperature, relative humidity.
Dew-point temperature calculated from the internal temperature and relative humidity.

Ranges:

Temperature: (-20 to +60) °C
Relative humidity: (0 to 100) %RH without lasting condensation.
Dew-point temperature: -90 to +60 °C

Accuracy(*1):

Temperature: ± 0.4 °C
Relative humidity:
- sensor accuracy ±1.8 %RH
  (at 23 ºC in the range of 0 to 90 %RH)
- hysteresis < ±1 %RH
- non-linearity < ±1 %RH
- temperature error: 0.05 % RH/°C (0 °C to +60 °C)

Dew-point temperature: ±1.5 °C at an ambient temperature of T< 25 °C and RH >30 %. For details see diagrams in Annex 3.

Response time (air streaming velocity approx. 1 m/s) (*2):

Temperature: t63 < 2 min, t90 < 8 min (temperature jump 20 °C)

Relative humidity: t63 < 45 s, t90 < 4 min, t99 <4 h. (humidity jump 30 %RH, constant temperature)

Display resolution:

Temperature incl. dew-point temperature: 0.1 °C
Relative humidity: 0.1 %RH.

Recommended calibration interval:

1 year

(*1) *During battery charging temporary measurement accuracy deterioration may be found.*

(*2) *Important information is provided in the chapter Manufactured models – U3120M*

U3121M

Measured values:

Temperature and relative humidity measured by an external Digi/E series probe. The dew-point temperature is calculated from the measured temperature and the relative humidity.

Range, accuracy and response time:

Depending on the connected Digi/E series probe.

Connection mode:

Digi/E series probe. The probe is provided with a 4-pin M8 ELKA 4008V connector. The length of the Digi/E probe cable$_t$ not exceed 15 m.

Display resolution:

Temperature incl. dew-point temperature: 0.1 °C.
Relative humidity: 0.1 %RH.

Recommended calibration interval:

1 year (according to the connected probe)

U3631M

Measured values:

Internal temperature, relative humidity.
1x External temperature measured by an external COMET Pt1000/E probe.
Dew-point temperature calculated from the internal temperature and relative humidity.
Difference of external temperature and dew point temperature.

Ranges:

Internal temperature: (-20 to +60) °C
Relative humidity: (0 to 100) %RH without lasting condensation (*2).
Dew-point temperature: -90 to +60 °C
External temperature input:

(-90 to +260) °C, Pt1000/3850 ppm sensor
Measuring current: approx. 0.5 mA in pulse length approx. 60 ms

Accuracy(*1):

Internal temperature: ± 0.4 °C
Relative humidity:

- sensor accuracy ±1.8 %RH
  (at 23 ºC in the range of 0 to 90 %RH)
- hysteresis < ±1 %RH
- non-linearity < ±1 %RH
- temperature error: 0.05 % RH/°C (0 °C to +60 °C)

Dew-point temperature: ±1.5 °C at an ambient temperature of T< 25 °C and RH >30 %. For details see diagrams in Annex 3.

External temperature input (without probe):

± 0.2 °C in the range -90 °C to +100 °C
± 0.2 % of the measured value in the range +100 ° C to +260 ° C
The precision of the device with the connected temperature probe is determined by the above-mentioned precision of input and accuracy of the probe used.

Connection method (external probe):

Two-wire connection with the possibility of compensation for the cable wire resistance. The probe is terminated by a 3-pin M8 ELKA 3008V connector. The method of interconnection is given in Appendix 2.

The recommended length of probes Pt1000/E is up to 15 m, not longer than 30 m. It is recommended to use shielded cables.

Response time (air streaming velocity approx. 1 m/s) (*2):

Internal temperature: t63 < 2 min, t90 < 8 min (temperature jump 20 °C)

Relative humidity: t63 < 45 s, t90 < 4 min, t99 <4 h. (humidity jump 30 %RH, constant temperature)

Display resolution:

Internal temperature incl. dew-point temperature: 0.1 °C
Relative humidity: 0.1 %RH
External temp. input: 0.1 °C, 16-bit converter range

Recommended calibration interval:

1 year

(*1) *During battery charging temporary measurement accuracy deterioration may be found.*

(*2) *Important information is provided in the chapter Manufactured models – U3631M*

U4440M

Measured values:

Internal temperature, relative humidity, barometric pressure and the concentration of CO_2 in the air. Dew-point temperature calculated from the internal temperature and relative humidity.

Ranges:

Temperature: (-20 to +60) °C
Relative humidity: (0 to 100) %RH without lasting condensation (*2).
Barometric pressure (absolute): 700 hPa to 1100 hPa
Concentration of CO_2 in the air: 0 to 5000 ppm
Dew-point temperature: -90 to +60 °C

Accuracy (*1):

Temperature: ± 0.4 °C
Relative humidity:
- sensor accuracy ±1.8 %RH (at 23 ºC in the range of 0 to 90 %RH)
- hysteresis < ±1 %RH
- non-linearity < ±1 %RH
- temperature error: 0.05 % RH/°C (0 °C to +60 °C)

Barometric pressure: ± 1.3 hPa at 23 °C
CO_2 concentration in the air:
50 + 0.03 × MV [ppm CO_2 at 23 °C and 1013 hPa]
Temperature dependency in range -20...45 °C:
typ. ± (1 + MV / 1000) [ppm CO_2/°C]
MV…measured value
Dew-point temperature: ±1.5 °C at an ambient temperature of T< 25 °C and RH >30 %. For details see diagrams in Annex 3.

Response time (air streaming velocity approx. 1 m/s) (*2):

Temperature: t63 < 2 min, t90 < 8 min (temperature jump 20 °C)
Relative humidity: t63 < 45 s, t90 < 4 min, t99 <4 h. (humidity jump 30 %RH, constant temperature)
Barometric pressure: t90 <44s
CO_2 concentration in the air: according to the set CO_2 measurement interval (2 min / 10 min)

Display resolution:

Temperature incl. dew-point temperature: 0.1 °C
Relative humidity: 0.1 %RH
Barometric pressure: 1 hPa
CO_2 concentration in air: 1 ppm

Recommended calibration interval:

1 year

(*1) *During battery charging temporary measurement accuracy deterioration may be found.*

(*2) *Important information is provided in the chapter Manufactured models – U4440M*

Measured values:

2 x temperature by an external COMET Pt1000/0 probe

2 x binary input intended for voltage to be applied to it or a voltage-free contact (an open-collector transistor) to be connected to it. This device is not suitable for catching the „voltage applied/not applied" states.

Range:

Temperature: (-90 to +260) °C, Pt1000/3850 ppm
Measuring current: ca 0.5 mA in ca 60 ms long pulses
Both voltage and no-voltage contact can be connected to the binary input without the need for configuration.

Voltage levels:

„L" level input voltage:	< 0.8 V(*)
„H" level input voltage:	> 2 V
Minimum voltage applicable:	0 V
Maximum voltage applicable:	+30 V DC

(*) The voltage necessary for establishing the „L" level must factually be applied. Should the input be disconnected, the device will sense the „H" level.

Parameters of the voltage-free contact:

Contact resistance in „switched-on" state:
< 10 kΩ
Contact resistance in the „switched-off" state:
> 2 MΩ
Excitation voltage: approx. 3 V
Minimum state duration necessary for latching the state: 1s

Input accuracy (without probes):

±0.2 °C in the range of -90 to +100 °C
±0.2 % of the measurement value in the range of +100 to +260 °C

The accuracy of the device with the temperature probe connected is determined by the above input accuracy and the accuracy of the probe used.

Connection mode:

Split connection block, maximum wire cross section 1.5 mm^2. Recommended length of the Pt1000 probe cables is maximum 15 m, a length of 30 m should not be exceeded. Maximum length of the binary inputs cables is 30 m. It is recommended to use shielded cables.

CAUTION: The inputs are not galvanically separated!

Response time:

Is determined by the response time of the used probe.

Resolution:

0.1 °C converter range: 16 bits

Recommended calibration interval:

2 years

U6841M

Measured values:

3x current input,
1 x binary input. This input can be configured to accept voltage signals or a voltage-free contact (as e.g. an open-collector transistor). Unlike the U0843M model, this input can capture connected/disconnected voltage status.

Range and input levels:

Current input:

Range: (0 to 20) mA DC
Accuracy: ± 20 uA
Resolution: better than 1 uA
Input resistance: approx. 100 Ω
Minimum current: 0 mA (open circuit)
Maximum current: limited to approx. 40 mA

Binary input configured for voltage measurements:

Input voltage for the „L“ level: < 0.8 V(*)
Input voltage for the „H“ level: > 2 V
Minimum applicable voltage: 0 V
Maximum applicable voltage: +30 V DC
(*)*When the input is disconnected, the device will measure the „L“ level.*

Binary input configured for a voltage-free contact or an open-collector transistor:

Contact resistance for the „switched-on“ state: < 10 kΩ
Contact resistance for the "switched-off" state: > 2 MΩ
Excitation voltage: approx. 3 V
Minimum state duration necessary for latching the state: 1s

Connection mode:

Split connection block, maximum wire cross section 1.5 mm^2. The maximum cable length is 30 m. It is recommended to use shielded cables.

CAUTION: The inputs are not galvanically separated!

Recommended calibration interval:

2 years

Measured values:

2x user configurable binary input for applying voltage or connecting a voltage-free contact (as e.g. an open-collector transistor). Unlike the U0843M model, this input is able to catch also the „voltage applied/not applied“ states.

2 x counting input. This input, like the binary one, can be configured to accept voltage signals or a voltage-free contact (as e.g. an open-collector transistor). These counting inputs can be used as additional two binary ones.

Input levels:

Binary or counter input configured for voltage measurements:

Input voltage for the „L“ level: < 0.8 V(*)
Input voltage for the „H“ level: > 2 V
Minimum applicable voltage: 0 V
Maximum applicable voltage: +30 V DC
(*)*When the input is disconnected, the device will measure the „L“ level.*

Binary or counter input configured for a voltage-free contact or an open-collector transistor:

Contact resistance for the „switched-on“ state: < 10 kΩ
Contact resistance for the "switched-off" state: > 2 MΩ
Excitation voltage: approx. 3 V
Minimum state duration necessary for latching the state: 1s

Counter parameters:

Range: 24 bits (16 777 215), possibility of letting the counter overflow

Maximum pulse frequency when configuring for:

- voltage input: max. 5 kHz
- voltage-free contact or open collector transistor: max. 200 Hz

Further features: relative counter (count of pulses sensed during the recording interval)

Connection mode:

Split connection block, maximum wire cross section 1.5 mm^2. The maximum cable length is 30 m. It is recommended to use shielded cables.

CAUTION: The inputs are not galvanically separated!

Measured values:

Concentration of CO_2 in the air.

Ranges:

Concentration of CO2 in the air: 0 to 5000 ppm (the device it is possible to deliver with a range of 0 to 10000 ppm)

Accuracy:

CO_2 concentration in the air:
50 + 0.03 × MV [ppm CO_2 at 23 °C and 1013 hPa]
Temperature dependency in range -20...45 °C:
typ. ± (1 + MV / 1000) [ppm CO_2/°C]
MV…measured value

Response time (air streaming velocity approx. 1 m/s) (*1):

CO_2 concentration in the air: according to the set CO_2 measurement interval (2 min / 10 min)

(*1) *Important information is provided in the chapter Manufactured models – U4440M*

Display resolution:

CO_2 concentration in air: 1 ppm

Recommended calibration interval:

1 year

Operating and storage conditions

Operating temperature:

(-20 to +60) °C
Range of the display visibility: (-10 to +60) °C

Operating humidity:

(0 to 95) %RH without permanent condensation for models with CO2 sensor
(0 to 100) %RH without long-lasting condensation for other models

Provozní tlak:

(700 to 1100) hPa For models with CO2 sensor
(600 to 1100) hPa For other models

Operating environment:

chemically non-aggressive

Storage temperature:

(-20 to +45)°C

Storage humidity:

(5 to 90) %RH

Mechanical properties

Dimensions (h x w x d):

93 x 61 x 53 mm without connected cables and connectors

Mass:

Ca 250 g including batteries

Case material:

Polycarbonate LEXAN EXL1434T resin

Ingress protection:

Device type	*Protection class*	
	case with electronics	temperature and rel. humidity sensor
U0110M U0141M U3121M	IP67(*)	--
U3120M U3631M	IP67(*)	IP30
U4440M	IP20	IP20
U0843M U6841M U7844M U8410M	IP20	--

(*)*To reach this ingress protection, the device cover screws must be properly tightened, the USB connector must be provided with a closing cap, and all connector screws must be tightened. A connector that is not used must be provided with a closing cap.*

Optional accessories:

LP100 - lockable datalogger holder for wall mounting

Declaration of conformity

This datalogger is in compliance with the requirements of Directive 2014/35/EU. The original Declaration of Conformity can be found on the manufacturer's website www.cometsystem.com.

Dimensions

U0110M, U8410M

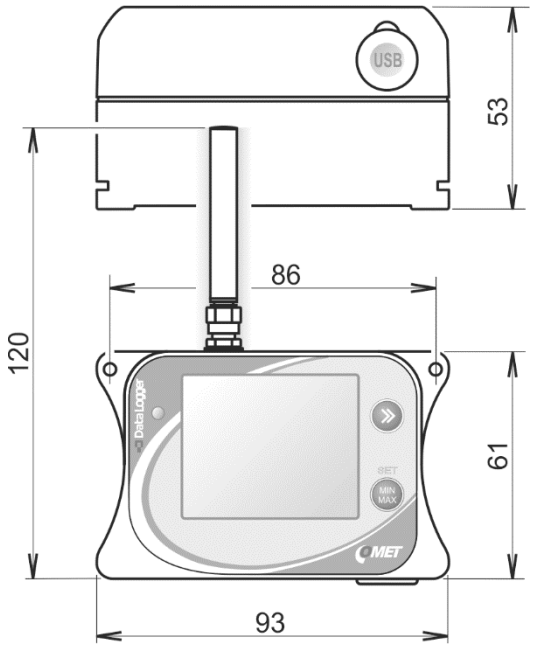

U0141M

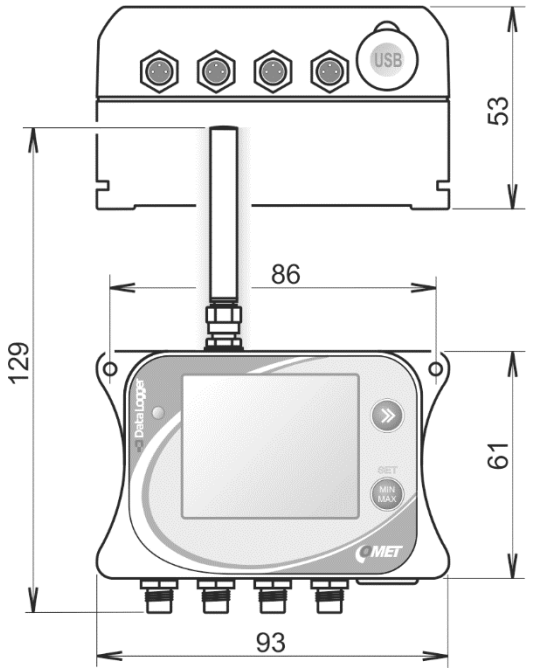

U3120M, U4440M

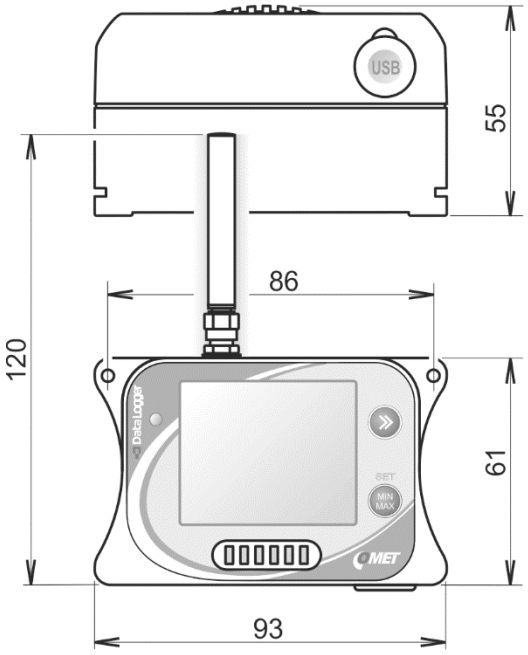

U3121M

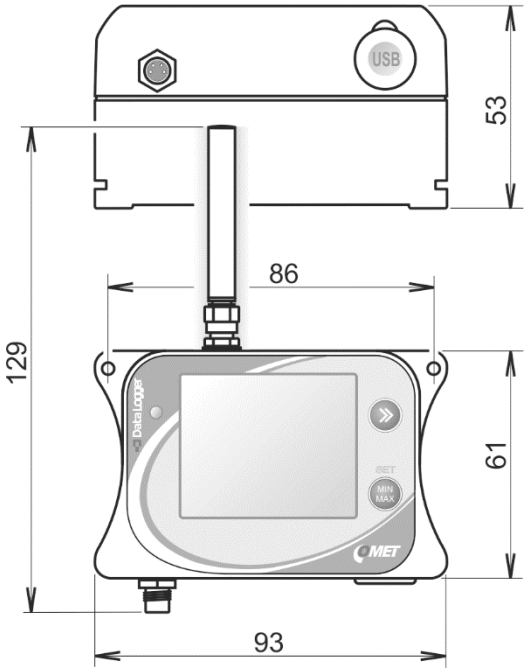

U3631M

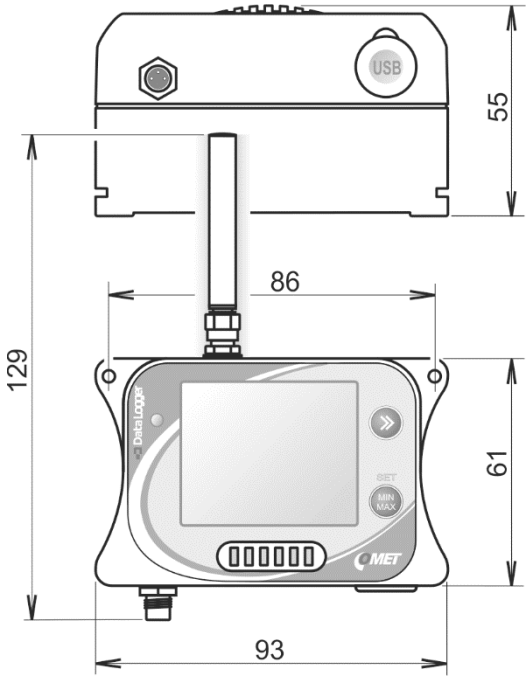

U0843M, U6841M, U7841M

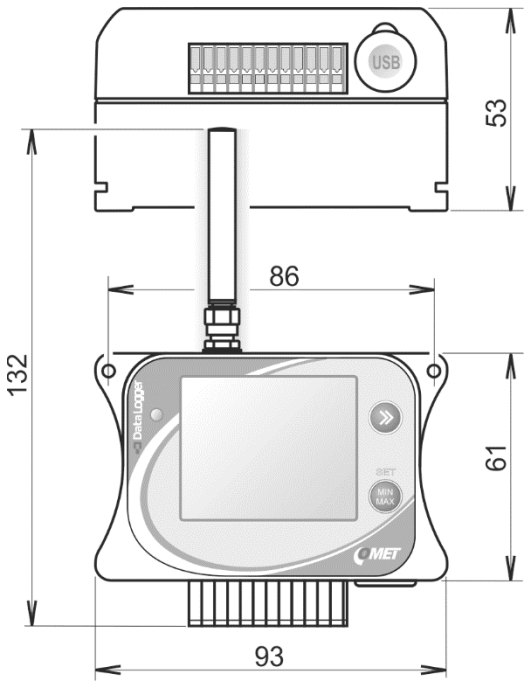

Annexes

Annex 1: Selected error messages of the device

Failure	Description and debugging
Error 1	Value exceeding the hardware range (value too low). - The Pt1000 probe is short-circuited. *Check the probes connected and the signals applied.*
Error 2	Value exceeding the hardware range (value too high). - The Pt1000 probe is broken. *Check the probes connected and the signals applied.*
Error 3 **Error 17** **Error 18** **Error 19**	Measured value is not available. *In device U3121 check, and, if needed, replace the Digi/E probe connected. In the other models a device failure may be suspected.*
Error 4 **Error 56**	Measured value is not valid. *Measurement or calculation failure.*
Error 5	Too few valid values for an average to be calculated. *Concerns recording average /Min/Max values.* *This error means that there has not yet been a sufficient number of valid values for calculating the average value.*
Error 9	Measured value is outside the measurement range (e.g. temperature with Pt1000). The reason can be a faulty probe, another sensor type, a parasitic coupling between the inputs or an incorrect device calibration. *Try another probe; check the cables and possible parasitic coupling.*
Error 10	The device is switched off (the measured values are not available)
Error 11	No valid data of the counter, batteries missing in the device. *Reset the counter content by means of the SW, repeat the measurement.*
Error 13 **Error 14** **Error 15**	CO_2 concentration sensor is not available, or it does not work correctly. *Have the device repaired. This applies to the CO_2 concentration sensor devices only.*
Error 16	The measured CO_2 value is not available due to low battery voltage. *Charge the battery or replace it.*

Error	Description and debugging
Error 20	The source value of the calculated quantities is not available. *Check in the SW whether measurement values are available (temperature and relative humidity) for this calculated quantity in question (e.g. the dew-point temperature).*
Error 21	Calculation failure, incorrect device calibration. *Have the device repaired.*
Error 22	Counter overflow in the case that in the device configuration it is required to report this as a failure. *Reset the counter by means of the SW, or, as the case may be, change the setting for the overflow limit.*
Error 50, **Error 52,** **Error 55**	Device configuration failure, corrupted configuration. *Read the configuration into the SW, check for the correct setting of all items, save the configuration in the device again.*
Error 51	The Digi/E series probe contains invalid calibration constants. *Get the probe repaired or contact the producer.*
Error 128 **Error 255**	Error massages generated during communication with the device. *Repeat the communication, contact the producer.*

Annex 2: Connection of the Pt1000/E serie probe connector

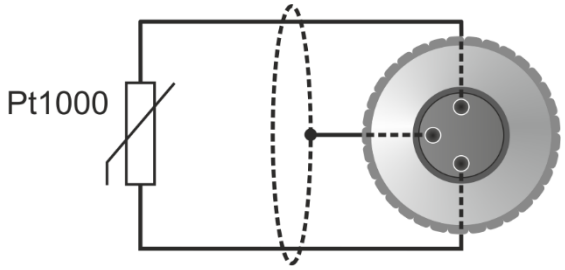

Annex 3: Accuracy of the dew-point temperature measurement

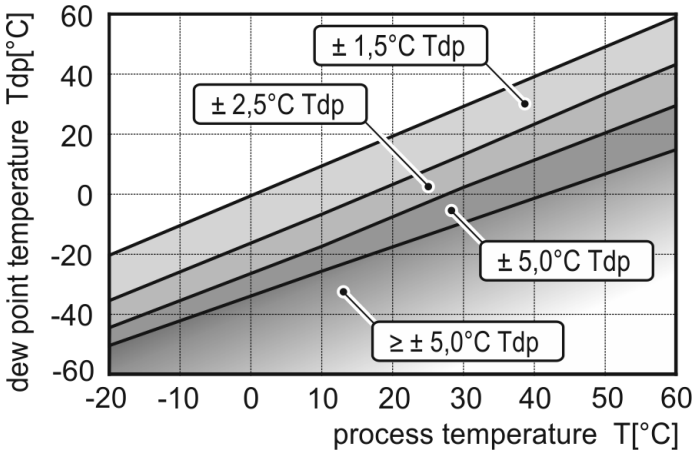

Annex 4: Connecting block

Some inputs are equipped with a split self-locking WAGO connector block. Connect the wires to the block with either the supplied SP013 or a screwdriver corresponding to the size: insert a screwdriver into the connecting block's angular opening situated above the circular opening. Open the connector by turning the screwdriver moderately, insert the wire and close the connector by subsequent disengaging the screwdriver. See the illustration.

The connecting block can be taken out of the device without the necessity of disconnecting any wire.

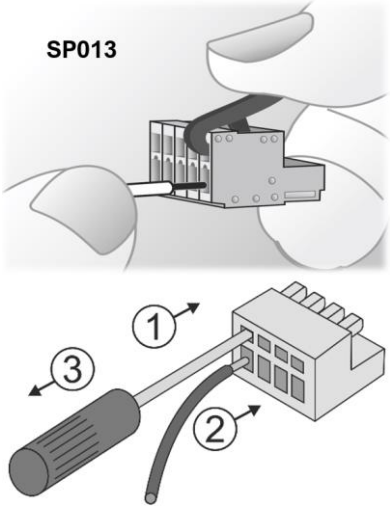

Annex 5: SMS message format

SMS message format for SYSTEM ALARM:

The message header includes:
SYSTEM ALARM<enter>
„Description of the device DescDev“<enter>“
Depending on the type of alarm, the corresponding text:

- *Data memory limit overflow,*
- *Battery warning,*
- *Battery empty,*
- *Battery Ok,*
- *External power lost,*
- *External power Ok;*
- *Date/Time Error,*
- *Date/Time Ok;*
- *Measuring Error on input: …..;*
- *Measuring Error END on input: …..,*
- *Configuration error,*
- *Configuration Ok,*

The time of the event, such as „20170808 10:44“

Texts are fixed, user-immutable, if multiple events occur simultaneously and the length of the message exceeds 160 characters (max message length), then they will be divided into multiple messages.

Format of alarm SMS message from measured value:

Description of the device DescDev .... max. 32 chars <enter>
Name of the measured location: max. 16 chars <enter>
Text „Actual value: measured value + unit (or binary input status)<enter>
Text ¨ALARM¨ or (Text „ALARM END“) <enter>
Description of the alarm: max. 16 chars
Separator comma + gap
Start time / end time of the alarm, such as 2016/05/08 10:44 <enter>
Text „ALARM“ (Text „ALARM END“)
In the case of other alarms followed by <enter> and continues with information about the next alarm
Description of the alarm: max. 16 chars

Separator comma + gap 2 chars
Start time of the alarm, such as 2016/05/08 10:44
: :
: :

The length of one message is limited to 160 characters, if there is a requirement to send more characters, the characters are divided into more messages.

DataKeepAliveSMS format (suitable for automated data processing):

All data coded into ASCII, it means 1 Byte will be sent as 2 ASCII characters. (hex. value 0x9E will be sent as two ASCII characters '9' 'E')

Initial text "Datalogger"	*10 ASCII chars*
Space	*1 ASCII char*
Serial number	*(4 byte i.e. 8 ASCII chars)*
Space	*1 ASCII char*
Text "ActualData"	*10 ASCII chars*
Space	*1 ASCII char*
Device Kind	*(1 byte i.e. 2 ASCII chars)*
Space	*1 ASCII char*
Status (AState)	*(2 byte i.e. 4 ASCII chars)*
Space	*1 ASCII char*
Memory occupation [%]	*(1 byte i.e. 2 ASCII chars)*
Space	*1 ASCII char*
Alarm I states on all chan.:	*(1 byte i.e. 2 ASCII chars)*
Space	*1 ASCII char*
Alarm II states on all chan.:	*(1 byte i.e. 2 ASCII chars)*
Space	*1 ASCII char*
Actual values of all 8 chan. in IEEE Float format:	
	(8x4=32 byte i.e. 64 ASCII chars)
Space	*1 ASCII char*
Units 3 char per channel	*(3x8 = 24 ASCII chars)*
Space	*1 ASCII char*
Value of the GSM signal level CsqRssi	
	(1 byte i.e. 2 ASCII chars)
Space	*1 ASCII char*
Index of the currently set sending interval KeepAlive SMS	
	(1 byte i.e. 2 ASCII chars)
Space	*1 ASCII char*
Time	*32b time information, always 8 ASCII chars*
Total sends:	*152 ASCII chars*

HumanKeepAliveSms format:

The Text of the message is gradually consisting of the items in the order below. The length of this report is limited to max 160 characters. If the message was longer, then it sends only the first 160 characters.

The format of the message:

- *description of the device from the configuration: max. 32 chars*
- *<CR><LF> ... 2 chars*
- *according to the device configuration, the current value and the unit are inserted for each channel switched on for measurement. If Alarm1 is active at the same time, then "!" is inserted BEFORE CURRENT VALUE. If Alarm2 is also active, then "!" is inserted AFTER UNIT (e.g. "!25.3%!" means that Alarm1 and Alarm2 are active).*
- *<CR><LF> ... 2 chars*
- *information about the state of memory occupation*
- *<CR><LF> ... 2 chars*
- *information about the state of the battery*
- *<CR><LF> ... 2 chars*
- *information about the level of the GSM signal*
- *<CR><LF> ... 2 chars*
- *inserts the current time of the device*
- *<CR><LF> ... 2 chars*

Watching the daily limit of SMS sent:

When a request to send an SMS occurs (for example an alarm occurred), the number of already sent SMS messages is checked for the given day. It monitors both the messages sent per day (the sum of the SMS sent when the power supply from battery or external power supply) and the number of messages sent when the power supply from battery. Both limits can be set using the user's SW. If the daily limit of the sent messages was reached, then instead of the alarm SMS is send to the given number different the notification SMS about exceeding the daily limit and sending of additional SMS to that number will stop. The counters of the daily limit of sending SMS are reset at midnight (0:00).

Annex 6: Firmware updates

FW version 0.0.118 changes:

- added new JSON data version format Version5
- added new parameter: BatteryPercentage.

FW version 0.0.117 changes:

- added support for Security communications – user rights.

FW version 0.0.116 changes:

- added new JSON data version format Version4
- added new parameters: RstOk, IntervalPowerMode, IntervalBatteryMode, Rssi
- delete parameter: Interval.

FW version 0.0.102 changes:

- added option to set the format version of the sent JSON data, to support backward compatibility with older versions of evaluation systems.
  Initial version (FW 0.0.90), version 1 (FW 0.0.92, 0.0.93), version 2 (from FW 0.0.94), version 3 (from FW 0.0.101)
- modified method to sending SMS a JSON data messages:
  a) If there is some request to send JSON or SMS
  Modem starts and tries to find mobile signal and check its level. If signal is not detected, modem turns off and waits – an idle time for next connection attempt is increased dynamically. It means modem, after unsuccessful mobile network signal detection, will try to connect again after 10 s, 30 s, 1 min, 5 min, 10 min, 30 min, 1 hour, 3 hours, 6 hours, 12 hours (till now was waiting 30s repeatedly). It will save the battery energy if there is no signal available. If an external power is available, then waiting interval is extended to 10 min max. When new event requesting to send SMS or JSON data occur, modem once tries to start immediately. If it fails again, previous delay is restored again.

  b) When modem tries to send SMS
  If it is not possible to send SMS to pre-set phone number (network signal is available already), it will repeat it 3 times. If still not possible to send SMS, SMS will be deleted, and this situation will be marked into device's record.

  c) When modem tries to send JSON data
  Under normal conditions when there is necessary to send the data, modem is switched on, logged to mobile network, connected to server and transfers JSON data. But when mobile network or receiving server is temporary unavailable, then the data cannot be send immediately. If some error during data sending occurs, logger tries to resend it twice again immediately. If it still fails, JSON message stays stored into internal buffer (if free space is available yet) and is going to be send at next sending time again. It means, unsent data packet is not lost and will be delivered later together with newer one. This is very useful function if mobile network or server connection is temporary lost. On the other hand, receiving server can receive data with bigger delay. If you want to set time stamps for received data by server's

receiving time, it is recommended to use „Delete unsent data“ option. It will ensure that received data is close to their original time without bigger desynchronization. Undelivered data will be deleted to prevent data time stamp mismatch.

- Extended the time to detect GSM signal when logging into the mobile network from 15s to 25s.
- The daily limit of sent SMS or data messages is calculated from the beginning of the data sending, regardless of whether it was received.